LABCONCO CORPORATION
8811 Prospect Avenue
Kansas City, MO 64132
(800) 821-5525, (816) 333-8811
(816) 363-0130 fax
labconco@labconco.com

User's Manual

Protector® Controlled Atmosphere Glove Boxes

Base Catalog Model No.	Operation Type	Liner Material	Liner Width	(Last Two Digits of Configured Catalog Number) Electrical Receptacle Voltage/Frequency: North America 100-115V 50/60 Hz	British (UK) 230V 50/60 Hz	Schuko 230V 50/60 Hz	China Australia 230V 50/60 Hz	North America 230V 60 Hz Only
50600	Manual	Fiberglass	Single	10	31	35	40	45
50601	Manual	Stainless Steel	Single	10	31	35	40	45
			Double	12	33	37	42	47
50800	Auto	Fiberglass	Single	10	31	35	40	45
50801	Auto	Stainless Steel	Single	10	31	35	40	45
			Double	12	33	37	42	47
50800	Combination	Fiberglass	Single	60	65	70	75	80
50801	Combination	Stainless Steel	Single	60	65	70	75	80
			Double	62	67	72	77	82

Manual is basic pressure control. **Auto** is automatic pressure control. **Combination** is automatic pressure control with blower & filter conversion for particulates.

To receive important product updates, complete your product registration card online at **register.labconco.com**

Please read the User's Manual before operating the equipment.

Copyright © 2023 Labconco Corporation. The information contained in this manual and the accompanying products are copyrighted and all rights reserved by Labconco Corporation. Labconco Corporation reserves the right to make periodic design changes without obligation to notify any person or entity of such change.

Warranty

Labconco Corporation provides a warranty to the original buyer for the repair or replacement of parts and reasonable labor as a result of normal and proper use of the equipment with compatible chemicals. Broken glassware and maintenance items, such as filters, gaskets, light bulbs, finishes and lubrication are not warranted. Excluded from warranty are products with improper installation, erratic electrical or utility supply, unauthorized repair and products used with incompatible chemicals.

The warranty for Protector® Controlled Atmosphere Glove Boxes will expire one year from date of installation or two years from date of shipment from Labconco, whichever is sooner. Warranty is non-transferable and only applies to the owner (organization) of record.

Buyer is exclusively responsible for the set-up, installation, verification, decontamination or calibration of equipment. This limited warranty covers parts and labor, but not transportation and insurance charges. If the failure is determined to be covered under this warranty, the dealer or Labconco Corporation will authorize repair or replacement of all defective parts to restore the unit to operation. Repairs may be completed by 3rd party service agents approved by Labconco Corporation. Labconco Corporation reserves the rights to limit this warranty based on a service agent's travel, working hours, the site's entry restrictions and unobstructed access to serviceable components of the product.

Under no circumstances shall Labconco Corporation be liable for indirect, consequential, or special damages of any kind. This warranty is exclusive and in lieu of all other warranties whether oral, or implied.

Returned or Damaged Goods

Do not return goods without the prior authorization from Labconco. Unauthorized returns will not be accepted. If your shipment was damaged in transit, you must file a claim directly with the freight carrier. Labconco Corporation and its dealers are not responsible for shipping damages.

The United States Interstate Commerce Commission rules require that claims be filed with the delivery carrier within fifteen (15) days of delivery.

Limitation of Liability

The disposal and/or emission of substances used in connection with this equipment may be governed by various federal, state, or local regulations. All users of this equipment are required to become familiar with any regulations that apply in the user's area concerning the dumping of waste materials in or upon water, land, or air and to comply with such regulations. Labconco Corporation is held harmless with respect to user's compliance with such regulations.

Contacting Labconco Corporation

If you have questions that are not addressed in this manual, or if you need technical assistance, contact Labconco's Customer Service Department or Labconco's Product Service Department at 1-800-821-5525 or 1-816-333-8811, between the hours of 7:30 a.m. and 5:30 p.m., Central Standard Time.

Part #5426400, Rev. J
ECO 15717

TABLE OF CONTENTS

CHAPTER 1: INTRODUCTION 1

CHAPTER 2: PREREQUISITES 7
- Support, Vibration & Preventive Requirements 8
- Location Requirements 8
- Oil & Exhaust Requirements for the Pressure Relief Bubbler 8
- Electrical Requirements 9
- Plumbing Requirements for Inert Gas, Vacuum, & Gas Purifier/ Drying Train 9
- Space Requirements 10

CHAPTER 3: GETTING STARTED 11
- Unpacking the Glove Box 12
- Installing the Glove Box on a Supporting Structure & Work Surface 12
- Adding the Oil & Connecting the Pressure Relief Bubbler to Outside Exhaust 13
- Installation of Gloves to the Glove Ports 16
- Connecting the Electrical Supply Source to the Glove Box 16
- Connect the Plumbing Lines for Gas, Vacuum & Gas Purifiers/Drying Trains 17
- Validating the Glove Box 21
- Oxygen Method Leak Testing Summary (ISO 10648-2) 24
- Pressure Change Method Leak Testing Summary (ISO 10648-2) 25

CHAPTER 4: PERFORMANCE FEATURES AND SAFETY PRECAUTIONS 26
- Performance Features 26
- Safety Precautions 30

CHAPTER 5: USING YOUR GLOVE BOX 39
- Routine Daily Work Procedures 39
- Hazardous Use with Chemicals 41
- Prohibited Acid Use 41
- Auto Pressure Controller Operation 41
- Front Panel Description 42
- Rear Panel Description 42
- Main Modes of Operation 43
- Glove Box Pressure Control – Operation Mode 1 44

Glove Box Evacuation (Purge)/Fill – Operation Mode 2 45
Transfer Chamber Evacuation (Purge) and Fill – Operation Mode 3 46
Setup Menu – Operation Mode 4 47

CHAPTER 6: MAINTAINING YOUR GLOVE BOX 52
Routine Maintenance Schedule 52
Initial Certification 53
Recertification 53
Fluorescent Light Replacement 53
Window Replacement 54
Solenoid Valve Replacement 56
Auto Pressure Controller Circuit Board Replacement 56

CHAPTER 7: ACCESSORIZING YOUR GLOVE BOX 58

CHAPTER 8: TROUBLESHOOTING 65

APPENDIX A: REPLACEMENT PARTS 66

APPENDIX B: DIMENSIONS 69

APPENDIX C: SPECIFICATIONS 70

APPENDIX D: CONTROLLED ATMOSPHERE OXYGEN & MOISTURE REMOVAL RATES 71

APPENDIX E: APPROXIMATE LIFE SPAN FOR ACCESSORY ATMOSPURE RE-GEN GAS PURIFIER 77

APPENDIX F: IONIZER FAN PERFORMANCE CRITERIA 78

APPENDIX G: HELIUM LEAK TEST PROCEDURE 80

APPENDIX H: CONVERSIONS 82

APPENDIX I: REFERENCES 83

APPENDIX J: REPLACEMENT GLOVES INSTALLATION PROCEDURE 84

Chapter 1: Introduction

Congratulations on your purchase of a Labconco Protector® Controlled Atmosphere Glove Box manufactured with fiberglass or stainless steel in a single or double width configuration. The Protector Controlled Atmosphere Glove Box comes equipped with four manual valves, pressure relief bubbler and either analog chamber pressure gauge indicators, or digital pressure gauge indicators. The Protector Controlled Atmosphere Glove Box is manufactured with either manual or automatic pressure control in single or double width. Combination glove boxes utilize automatic pressure control and feature HEPA or ULPA filters with integral blower. See Figures 1-1, 1-2, 1-3, and 1-4 at the end of Chapter 1. The glove boxes are designed to provide an effective physical barrier between the laboratory and the glove box interior. The barrier provides three distinct advantages. First, it helps protect the technician from hazardous materials. Second, it protects materials and laboratory equipment inside the main chamber from the effects of exposure to ambient air, oxygen, and moisture levels. Third, it provides a protective, leak-tight environment for your research, testing, or production procedures.

The permeation rate for stainless steel glove boxes is less than 0.16 ppm/min as tested to ISO 10648-2 test methods. The permeation rate for fiberglass glove boxes is less than 0.30 ppm/min as tested to ISO 10648-2 test methods. The permeation rate for double-wide stainless steel glove boxes is less than 1.00 ppm/min to account for center-jointed tolerances and multiple glove configurations as tested to ISO 10648-2 test methods. Each Protector Glove Box is helium leak tested at the factory to ensure no individual leaks greater than 1×10^{-6} cc/sec. The test results are as follows:

	Gas Permeant	Glove Port Covers	Glove Box Type: Protector (FRP)	Single-Wide Protector (stainless)	*Double-Wide or Left-Hand Door Protector (stainless)
Optimal Attainable Purity (ppm)	O_2	Installed	0.4	0.2	<5
	H_2O	Installed	2	1	<10
	O_2	None	0.9	0.8	<8
	H_2O	None	3	2	<15
Oxygen Permeation at -4" w.g. per ISO 10648-2 Test Method (ppm/min)	O_2	None	0.30	0.16	Class 2 Compliant <8.35
ISO 10648-2 Acceptance Level for Class 1 or Class 2 Controlled Atmosphere Glove Box (ppm/min)	O_2	None	<1.67 Class 1	<1.67 Class 1	<8.35 Class 2
Usable Permeation with pressure from (-1" w.g. to +1" w.g.)	O_2	None	0.16	0.14	<1.00 Class 2 Boundary
	H_2O	None	0.17	0.10	<1.00 Class 2 Boundary

The Protector Glove Boxes offer many unique features to enhance performance. To take full advantage of them, you **must** read and understand this manual and keep it handy for future reference. If you are unfamiliar with how the Glove Boxes operate, please review *Chapter 4: Performance Features and Safety Precautions* before you begin working in the glove box. Even if you are an experienced user, please review *Chapter 5: Using Your Glove Box* so you can use the glove box efficiently.

*Class 2 Note: Double-Wide & Left-Hand Door Systems
Double-Wide and Left-Hand Door Systems feature expanded sealing surfaces, multiple gloves, increased structural joints, and a moveable left-hand door to ensure the glove box system maintains a buffer below the global threshold of 8.35 ppm/min. Operational values for purity and permeation are based on Class 2 maximums to account for seal wear, center-joint tolerances, and multiple glove configurations.



Protector Controlled Atmosphere Glove Box with Auto Pressure Control shown with AtmosPure Re-Gen Gas Purifier and Adjustable Height Base Stand

Figure 1-1



Protector Controlled Atmosphere Glove Box with Manual Pressure Control and Adjustable Height Base Stand

Figure 1-2



Protector Combination Glove Box utilizes Auto Pressure Control for controlled atmospheres and filtered air with Integral Blower for particulate containment and cleanliness applications. The Glove Box is shown with the Adjustable Height Base Stand.

Figure 1-3

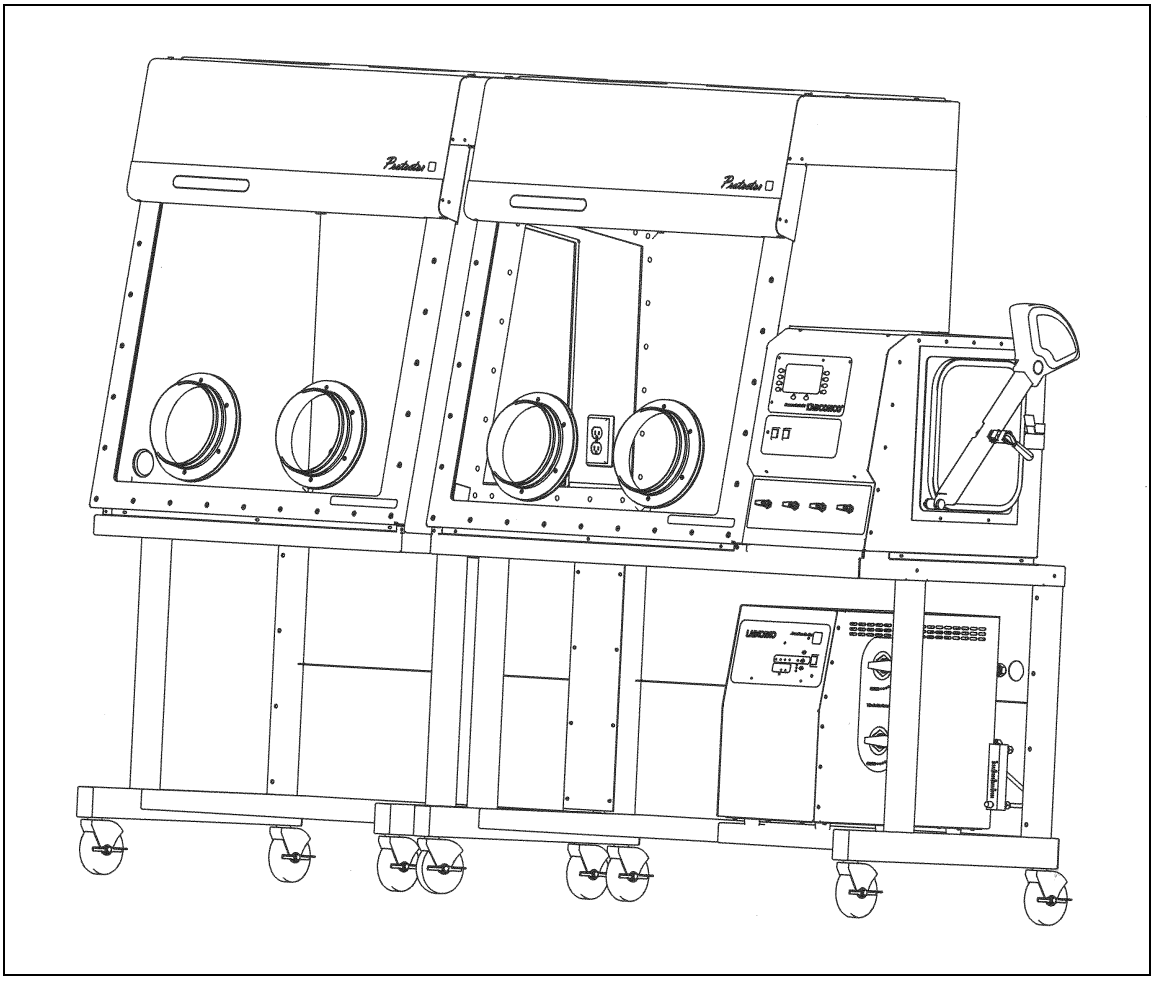

Protector Double Width Controlled Atmosphere Glove Box with Auto Pressure Control shown with AtmosPure Re-Gen Gas Purifier mounted on a doublewide mobile base stand

Figure 1-4

Chapter 2: Prerequisites

Before you install the glove box, you need to prepare your site for installation. You must be certain that the area is level and of solid construction. In addition, a dedicated source of electrical power should be located near the installation site to power the glove box. Additionally, the glove box should be strategically placed in the lab to provide efficient workflow and prevent operator interference from normal traffic flow.

Carefully read this chapter to learn the requirements for your installation site:

- The support, vibration and preventive requirements.
- The location requirements.
- The oil requirements and exhaust requirements for the pressure relief bubbler.
- The electrical power requirements.
- The plumbing requirements for gas, vacuum, and gas purifiers or drying trains.
- The space requirements.

Refer to *Appendix B: Protector Glove Box Dimensions* for complete glove box dimensions.

Refer to *Appendix C: Protector Glove Box Specifications* for complete electrical and environmental conditions, specifications and requirements.

Support, Vibration and Preventive Requirements

In the preparation of a glove box site, please consider the following:

- A bench or stand that is rigidly mounted to the floor or fixed to the wall, but not both, may be appropriate. 35" to 40" (889mm to 1,016mm) is typical for standing height (Labconco adjustable height base stands offered in Chapter 7 vary from 33" to 40" or 838mm to 1,016mm).
- The corners of a building typically have less vibration than the center, which promotes analytical balance stability.
- The bench typically should not contain any vibration-producing equipment, such as shakers or pumps.
- A marble slab with dampening pads placed within the enclosure is an effective low cost means of controlling vibration for analytical balance operation (see Balance Vibration Isolator in *Chapter 7: Accessorizing Your Glove Box*).

Location Requirements

The Protector Glove Boxes have been designed to rest on a typical 29"-30" (737mm-762mm) deep work surface. The height should be 35"-40" for standing position. Avoid placing the glove box in high traffic areas where walking might disrupt the operator or experimentation.

Oil and Exhaust Requirements for the Pressure Relief Bubbler

To prevent over or under pressurization of the main glove box chamber and prevent glass breakage, the Protector Controlled Atmosphere Glove Box includes a pressure relief bubbler that activates at pressures and vacuums above +5" water gauge or below -5" water gauge. The glove box ships with an oil container with a specific gravity of 0.87 and the bubbler must be filled with oil to a level of 6" (152mm). See Chapter 3 for instructions for adding oil.



WARNING: The overpressurization of air at positive pressure would allow any contaminants inside the glove box to vent into the room. To control this venting into the laboratory, Labconco recommends exhausting the 3/4" diameter pipe from the pressure relief bubbler to the outside. If needed, 3/4" I.D. neoprene hose circulation kits can be ordered from Chapter 7. If needed, purchase the 5441403 HEPA Filter Exhaust Kit from Chapter 7 to exhaust the bubbler through HEPA filtration and into the room.



WARNING: In the case of failure caused by excessive vacuum within the main chamber, the user must safely determine whether laboratory atmosphere entering the glove box could result in fire, explosive hazard or damage to property inside the glove box.

Electrical Requirements

Electrical receptacles should be located nearby for connecting the glove box cords, or other optional laboratory equipment. Single width units require two line cords and double width units require three line cords. Line cords are each rated at 100-115V, 12A or 230V, 12A. The entire glove box is rated 115V, 12A or 230V, 12A or 100V, 12A. One outlet is located inside the glove box and is rated for 115V, 10A or 230V, 10A or 100V, 10A. The exterior vacuum pump outlet is rated 100-115V, 12A or 230V, 6A. Doublewide models have an additional outlet, located inside the center of the glove box and is rated for 115V, 10A or 230V, 10A or 100V, 10A. Additional power strip accessories are available and can be connected to the interior receptacle outlet (see Chapter 7).

Plumbing Requirements for Inert Gas, Vacuum, and Gas Purifier/Drying Train

The Protector Controlled Atmosphere Glove Box has two valves located on the main glove box chamber and two valves located on the transfer chamber. The two valves on the main chamber should be used for the operation of the main chamber inert gas inlet and vacuum outlet lines. For effective operation and to prevent overpressurization that can cause glass breakage, the gas inlet lines **must never** be set at a pressure greater than 10-14 psi (69-96 kPa) through the use of a gas supply pressure regulator. The two valves on the transfer chamber are used for inert gas inlet and vacuum outlet lines. The transfer chamber lines can be connected together with the main chamber gas inlet and vacuum outlet lines to simplify gas and vacuum connections to both chambers. On the rear of the Protector Glove Boxes, there are two 3/4" compression fittings for connection to an accessory AtmosPure Re-Gen Gas Purifier or other drying train. The Gas Purifier per Figure 1-1 in Chapter 1 is used for the removal of oxygen and moisture from the main chamber atmosphere. Other drying trains can be used to remove organic vapors, acids, ammonia, or radioisotopes. See Chapter 7 for ordering information and Chapter 3 for setup. Illustrations for gas, vacuum, and gas removal accessories are shown in Chapter 3.

All solenoid valves utilize 3/8" (9.5mm) compression fittings or 3/8" (9.5mm) hose barbs for soft tubing. Both styles are offered for your convenience. Accessory gas and vacuum tubing kits are described in Chapter 7. Should you later require automatic chamber pressure controls (only for manually operated Protector Controlled Atmosphere Glove Boxes), see Chapter 3 for details on the accessory Pressure Controller and Chapter 7 for ordering information. The Pressure Controller is standard with Protector Glove Boxes with Auto Pressure Control and it automatically monitors and controls pressures in both the main chamber and transfer chamber; it also automates the operation of evacuating/purging and filling of the main chamber (gas outlet and gas inlet) up to 499 cycles and transfer chamber up to 199 cycles. Consult your Safety Officer should you require ventilation and/or filtration of the vacuum pump exhaust. Filtered exhaust (0.2 micron) and contaminate removal traps are available for the vacuum pump (see Chapter 7). See Chapter 3 for typical installation of vacuum outlet and inert gas inlet lines.

Space Requirements

The dimensions are shown in *Appendix B: Dimensions*. Adequate space to the right of the transfer chamber is required for loading and unloading.

Chapter 3:
Getting Started

Once the site for your glove box is properly prepared, you are ready to unpack, inspect, install, and validate performance of your system. Read this chapter to learn how to:

- Unpack and move the glove box.
- Set up the glove box with the proper supporting structure and work surface.
- Add the oil and if required connect an exhaust system to the pressure relief bubbler.
- Install the gloves.
- Connect the electrical supply.
- Connect the plumbing lines for gas, vacuum, and gas purifiers or drying trains.
- Validate performance of the glove box.



Each Protector Glove Box model weighs as follows:

- **Fiberglass, 350 lbs/157 kg.**
- **Stainless, 500 lbs/225 kg.**
- **Stainless Doublewide, 1000 lbs/450 kg.**

The shipping container allows for lifting with a mechanical lift truck or floor jack. If you must lift the glove box manually, follow safe-lifting guidelines. Do not lift by the upper sheet metal façade and front panel as damage can occur to the glove box liner.

Unpacking the Glove Box

We recommend that you do not remove the glove box from its shipping container until it is ready to be placed into its final location. Move the unit by placing a flat, low dolly under the shipping skid, or by using a floor jack.

Carefully remove the shrink-wrap and crating on the glove box and inspect it for damage that may have occurred in transit. **If damaged, notify the delivery carrier immediately and retain the entire shipment intact for inspection by the carrier.**

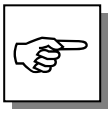

THE UNITED STATES INTERSTATE COMMERCE COMMISSION RULES REQUIRE THAT CLAIMS BE FILED WITH THE DELIVERY CARRIER WITHIN FIFTEEN (15) DAYS OF DELIVERY.

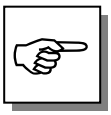

DO NOT RETURN GOODS WITHOUT THE PRIOR AUTHORIZATION OF LABCONCO. UNAUTHORIZED RETURNS WILL NOT BE ACCEPTED.

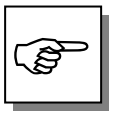

IF ENCLOSURE WAS DAMAGED IN TRANSIT, YOU MUST FILE A CLAIM DIRECTLY WITH THE FREIGHT CARRIER. LABCONCO CORPORATION AND ITS DEALERS ARE NOT RESPONSIBLE FOR SHIPPING DAMAGES.

Do not discard the packing material until you have checked all of the components and tested the glove box.

Installing the Glove Box on a Supporting Structure and Work Surface

Exercise caution when lifting or moving the glove box.

When installing the glove box onto a work surface or benchtop, ensure that the structure can safely support the combined weight of the glove box and any related equipment. The work surface should be as wide as the entire glove box to properly support it. The front of the glove box should be aligned with the front of the work surface for optimal comfort. A height of 35"-40" (889 mm-1016 mm) is appropriate for standing operation. Labconco base stands from Chapter 7 may be adjusted in height from 33"-40" (838 mm -1016 mm).

Adding the Oil and Connecting the Pressure Relief Bubbler to Outside Exhaust

The glove box ships with a separate oil container with a specific gravity of 0.87. The pressure relief bubbler prevents over or under pressurization of the glove box main chamber and activates at pressures and vacuums above +5" water gauge (1245 Pa) or below -5" water gauge (-1245 Pa) to prevent glass breakage and glove box liner damage. See Figure 3-1 as the bubbler **must** be filled with oil to a level of 6" (152 mm) measured vertically from the bottom of the stainless steel bubbler. Add the oil through the open exhaust port using a 3/4" I.D. hose (#5443500) and funnel.

As stated in Chapter 2, the main chamber pressure relief bubbler can be exhausted back into the room or exhausted to the outside, if required. Figure 3-1 shows the location of the pressure relief bubbler exhaust. After consulting with your Safety Officer and reading the prerequisites in Chapter 2, connect the exhaust the bubbler to the outside if your application requires it. If needed, the 3/4" I.D. neoprene circulation hose kit can be used and ordered from Chapter 7 to exhaust the bubbler to the outside. Furthermore, should your application require HEPA filtered exhaust to the room, purchase and install the 5441403 HEPA Filter Exhaust Kit from Chapter 7.



WARNING: The weight of the pressure relief exhaust ductwork system must be supported independently of the glove box superstructure or damage may occur.



The exhaust system should be installed by a qualified HVAC contractor.

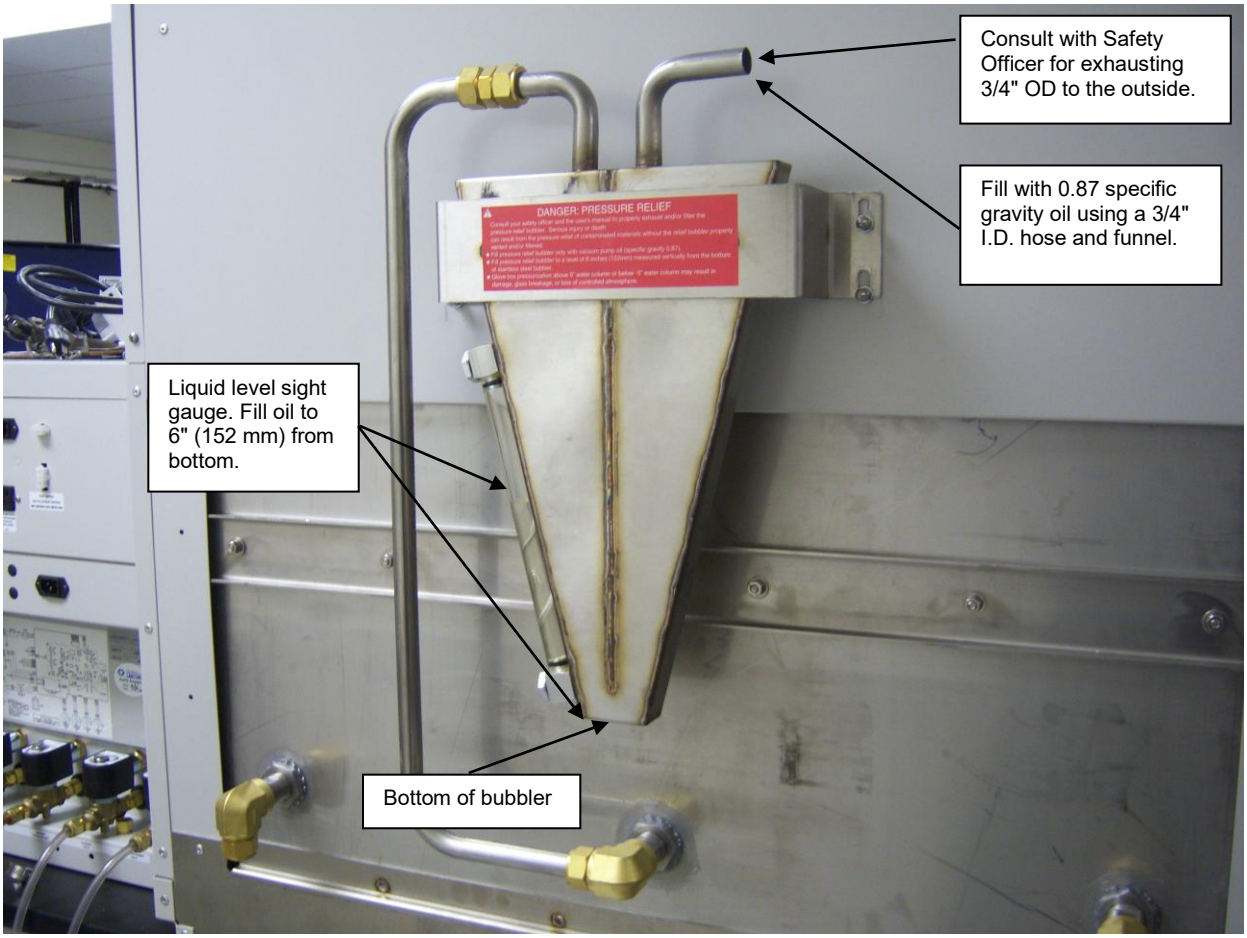

Figure 3-1
Pressure Relief Bubbler Set-up

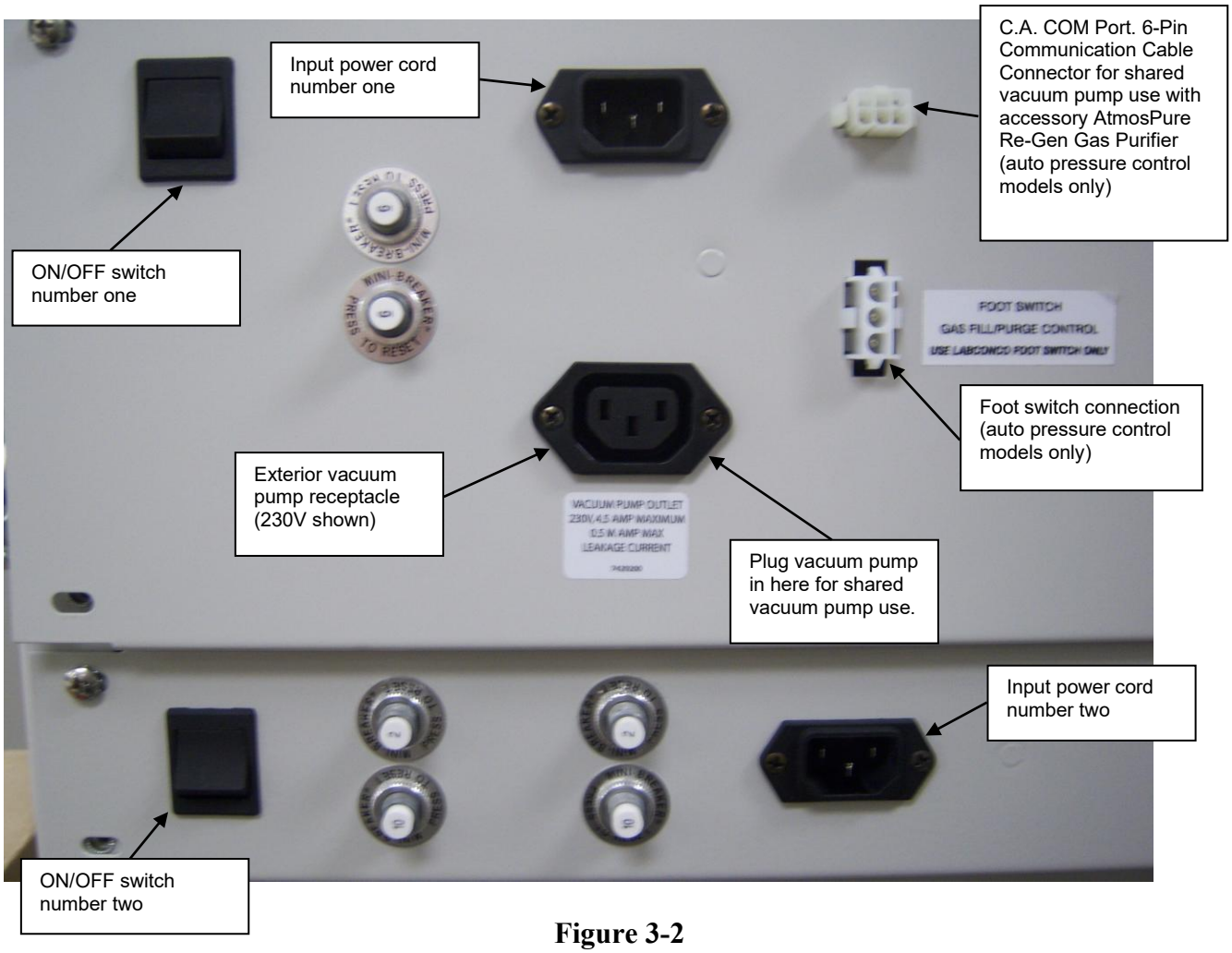

Figure 3-2
Electrical Connections, Back of Glove Box with Auto Pressure Control

Installation of Gloves to the Glove Ports

With the thumbs up and in a right/left orientation, secure the gloves in place on the glove ports by stretching the beaded glove cuff into the glove port groove nearest the window. Install the separate 8" diameter O-ring over the gloves, into the outer groove of the glove port surface. Stainless steel band clamps are provided for securing the separate O-ring into the glove port groove. Replacement gloves and parts are listed in Chapter 7.

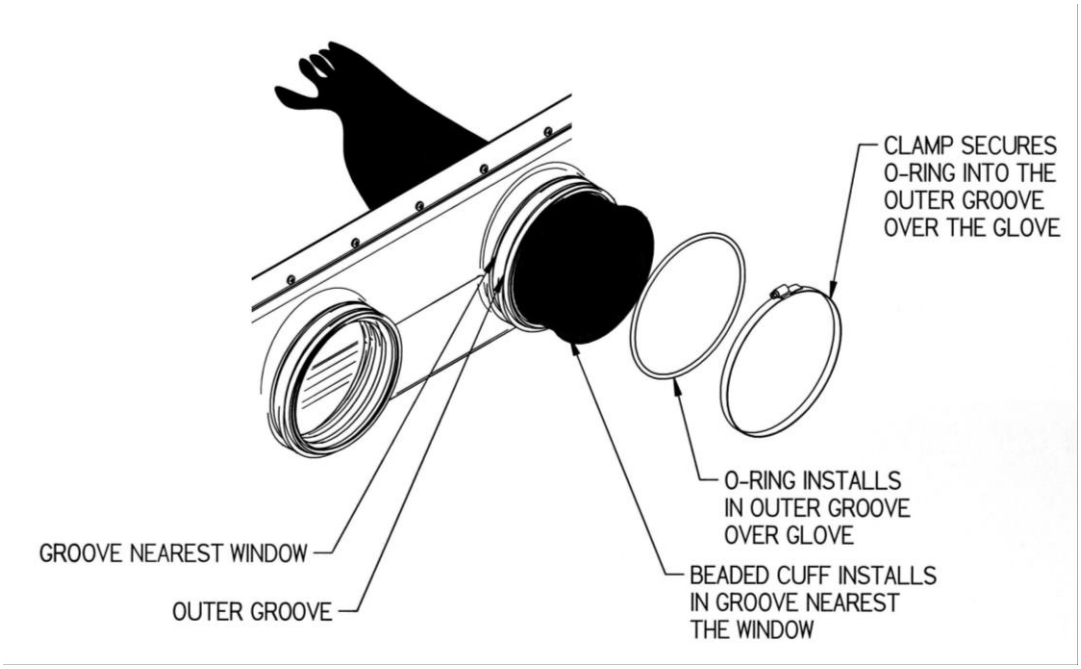

Figure 3-3
Glove Installation

Connecting the Electrical Supply Source to the Glove Box

Connect the power cords supplied to both IEC electrical supply plugs located on the back of the glove box. For doublewide models, connect one extra power cord for the centrally located duplex on the left side. 100-115V models are rated at 12 amps for each power cord. 230V models are rated at 12 amps for one power cord and 6 amps for the other power cord to power the exterior vacuum pump outlet. **The maximum circuit load for the interior electrical duplex is 10 amps.** The exterior vacuum pump receptacle is rated at 8 amps for 100-115V models and 4.5 amps for 230V models. On auto pressure control and combination models, a foot switch for pressure control is supplied and is connected (3 position connector) to the back of the glove box as marked. See Figure 3-2 for all electrical connections. See Figures 1-1 and 1-3 for foot switch.

Connect the Plumbing Lines for Gas, Vacuum, and Gas Purifiers/Drying Trains

Labconco offers various vacuum and gas tubing installation kits listed in Chapter 7 for connecting inert gas, vacuum, and gas purifiers to the glove box. Refer to Figures 3-4, 3-5, 3-6, 3-7, and 3-8 that depict the installation tubing kits. From Chapter 7, order Gas and Vacuum Tubing Connection Kit 5245100 or 5245200 and install using Figures 3-4 through 3-8. **For effective operation and to prevent overpressurization that can cause glass breakage, the inert gas line must never be set at a pressure greater than 10-14 psi (69-96 kPa) through the use of a gas supply pressure regulator.** The primary connecting method involves the use of 3/8" O.D. x 3/16" I.D. tubing for gas and vacuum line connections; a tube support insert **must** be placed inside the soft tubing to prevent the tube from disconnecting. The alternative connecting method uses a tube connector and hose clamp instead of a tube support insert. Rotary vane vacuum pump model numbers can be found in Chapter 7 and are required for all models as depicted in Figure 3-7. **Consult your Safety Officer to determine the suitability and requirement for venting the exhaust port of a vacuum pump to the outside.** An accessory 0.2 micron filter or vacuum line particulate trap can be installed in the vacuum line to prevent particulate material contamination of the vacuum pump. The 0.2 micron filter can also be installed in the inert gas supply line connected to the main chamber and transfer chamber to insure a particulate free gas supply (see Chapter 7). If required, other accessory chemical traps can also be added to the vacuum line to prevent vacuum pump contamination (see Chapter 7).

For ultra low oxygen and moisture purity levels, Labconco recommends the accessory AtmosPure Re-Gen Gas Purifier shown in Figure 1-1, Figure 1-3, and Figure 3-7. (See performance results listed in Chapter 1.) See Chapter 7 to order the AtmosPure Re-Gen Gas Purifier. Chapter 7 and Figure 3-7 also list and depict the AtmosPure Regeneration Plumbing Kit and AtmosPure Circulation Kit required for proper performance of the AtmosPure Re-Gen Gas Purifier. Chapter 7 also lists alternative drying trains that reduce oxygen and moisture. Contact Labconco for further details.

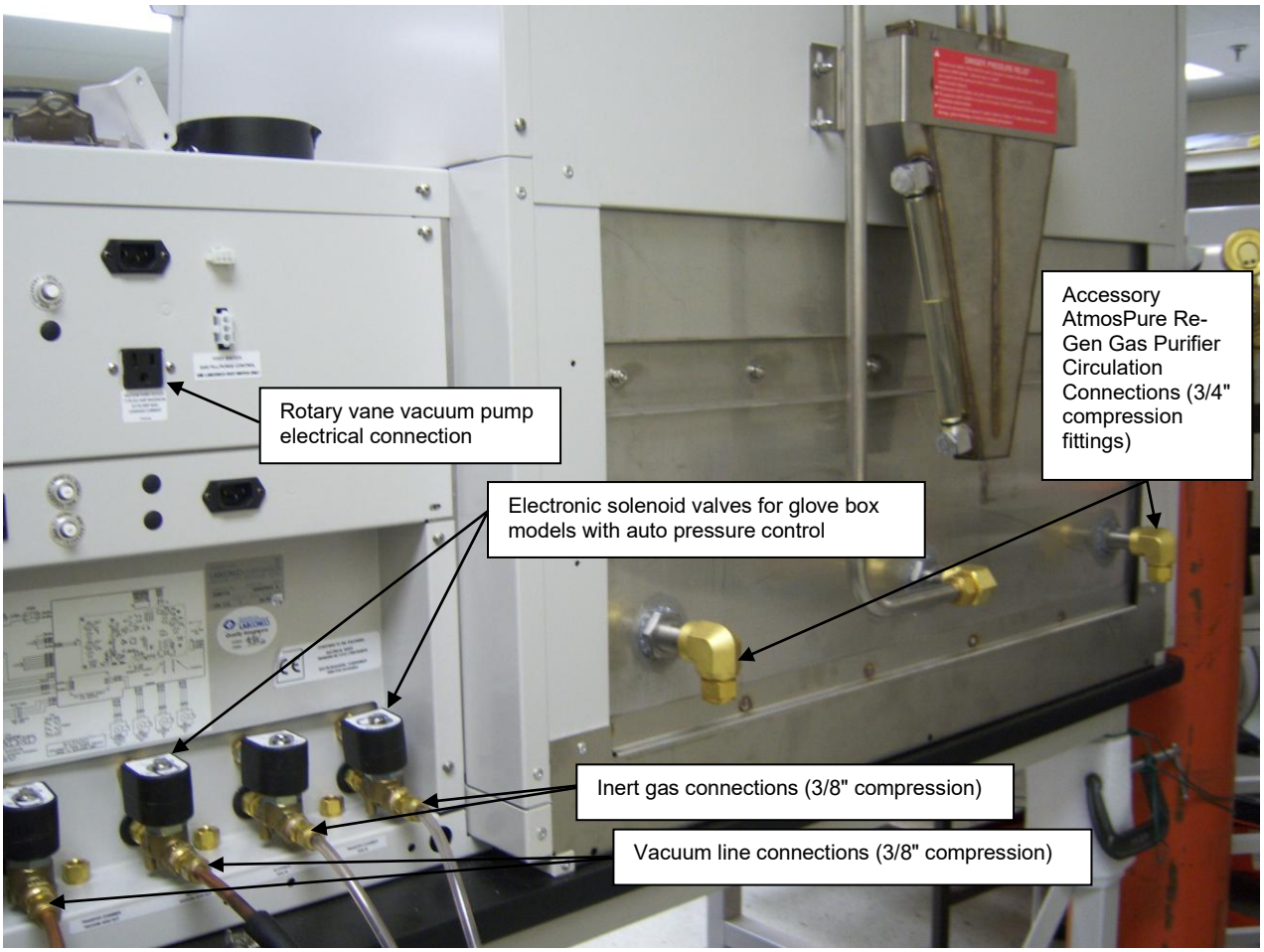

Figure 3-4
Required Plumbing Connections
– Rear view of glove box with auto pressure control

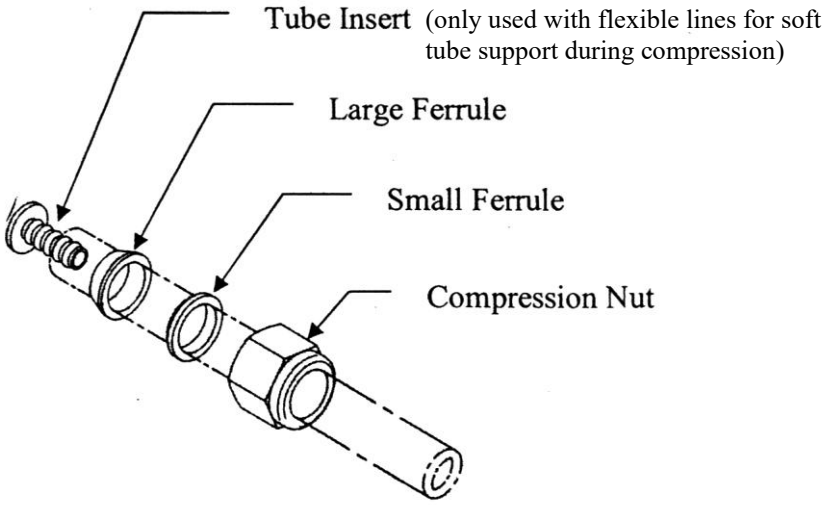

Figure 3-5
Typical Orientation of Ferrules

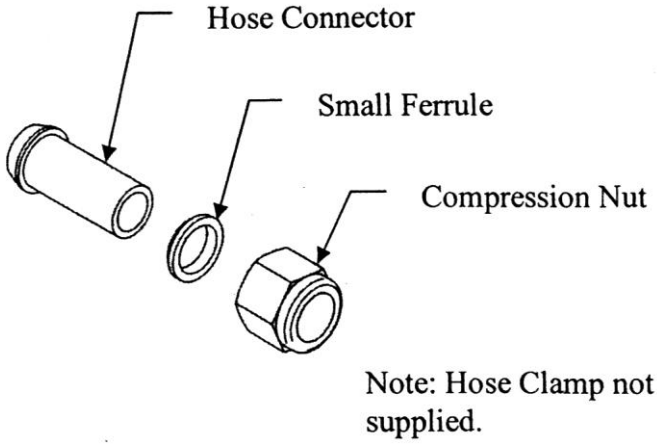

Figure 3-6
Alternate Tube Connection Using Hose Connector

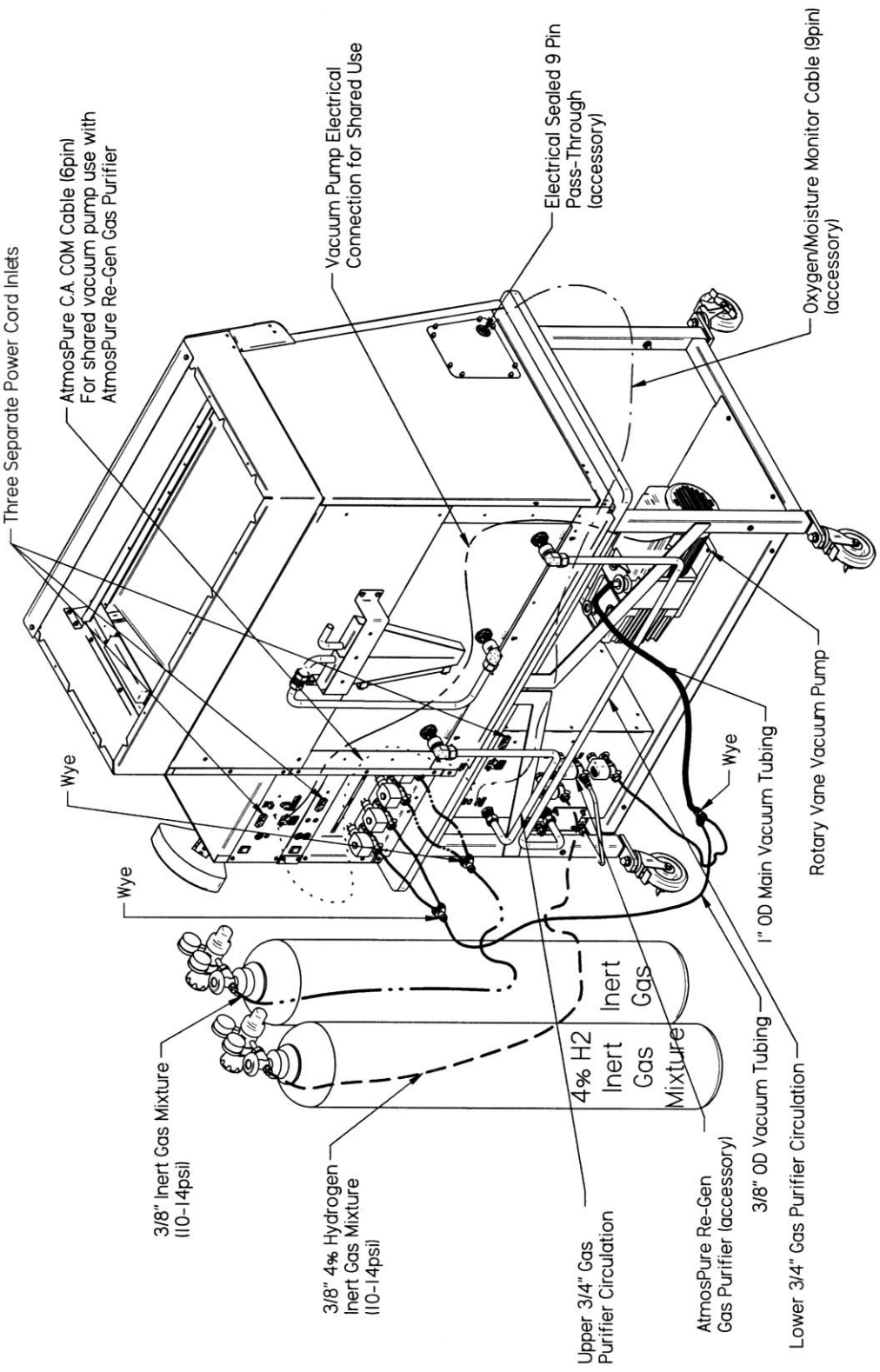

Figure 3-7
Rear View of Glove Box with auto pressure control, all plumbing connections, and accessory AtmosPure Re-Gen Gas Purifier with plumbing connections

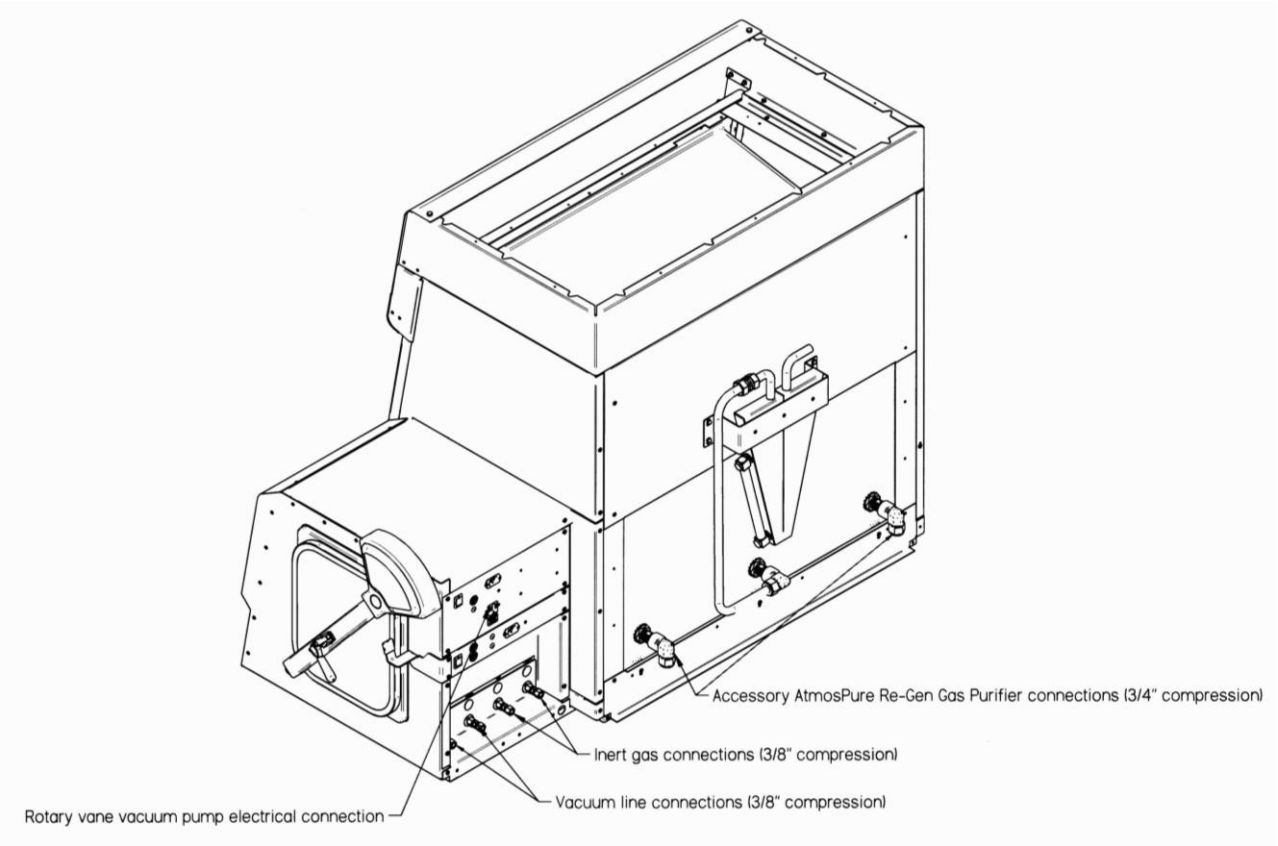

Figure 3-8
Rear View of Glove Box with manual control valves and the plumbing connections

Validating the Glove Box

Each Protector Glove Box has been helium leak tested at the factory for integrity and found to have no leaks greater than 1 x 10^{-6} cc/sec while at a positive pressure of 5 inches helium. Refer to Chapter 6, Initial Certification and Appendix G for Helium Leak Test Method.

Overall Glove Box Main Chamber Leak Test

The Protector Controlled Atmosphere Glove Box has been tested with an oxygen monitor detecting oxygen levels as low as 0.1 ppm; the rate of increase in oxygen over time was determined in accordance with the ISO 10648-2 oxygen leak decay test method. The results validate that the Protector Controlled Atmosphere Glove Box meets Class 1 conditions for controlled atmosphere chambers. Figure 3-9 and 3-10 show test results of the oxygen permeation or oxygen level increase as a function of time. Per ISO specifications, Class 1 controlled atmosphere chambers have a specified hourly leak rate of less than 5 x 10^{-4} (< 1.67 ppm/min) per Table 3-1 listed at the end of Chapter 3 with performance results summarized in Chapter 1.

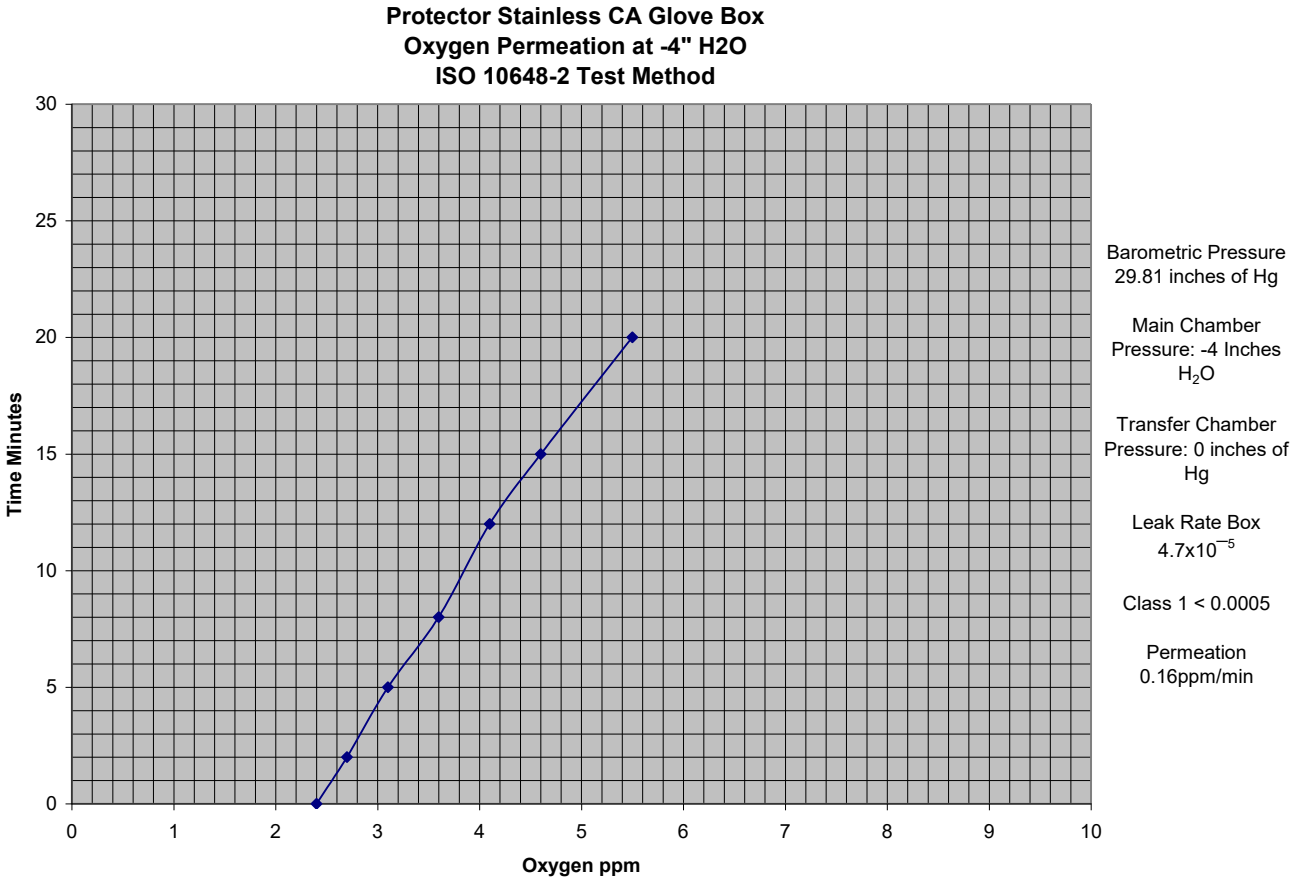

Results were attained at Labconco Corporation under controlled conditions for a single-wide stainless glove box. Actual results may vary.

Figure 3-9

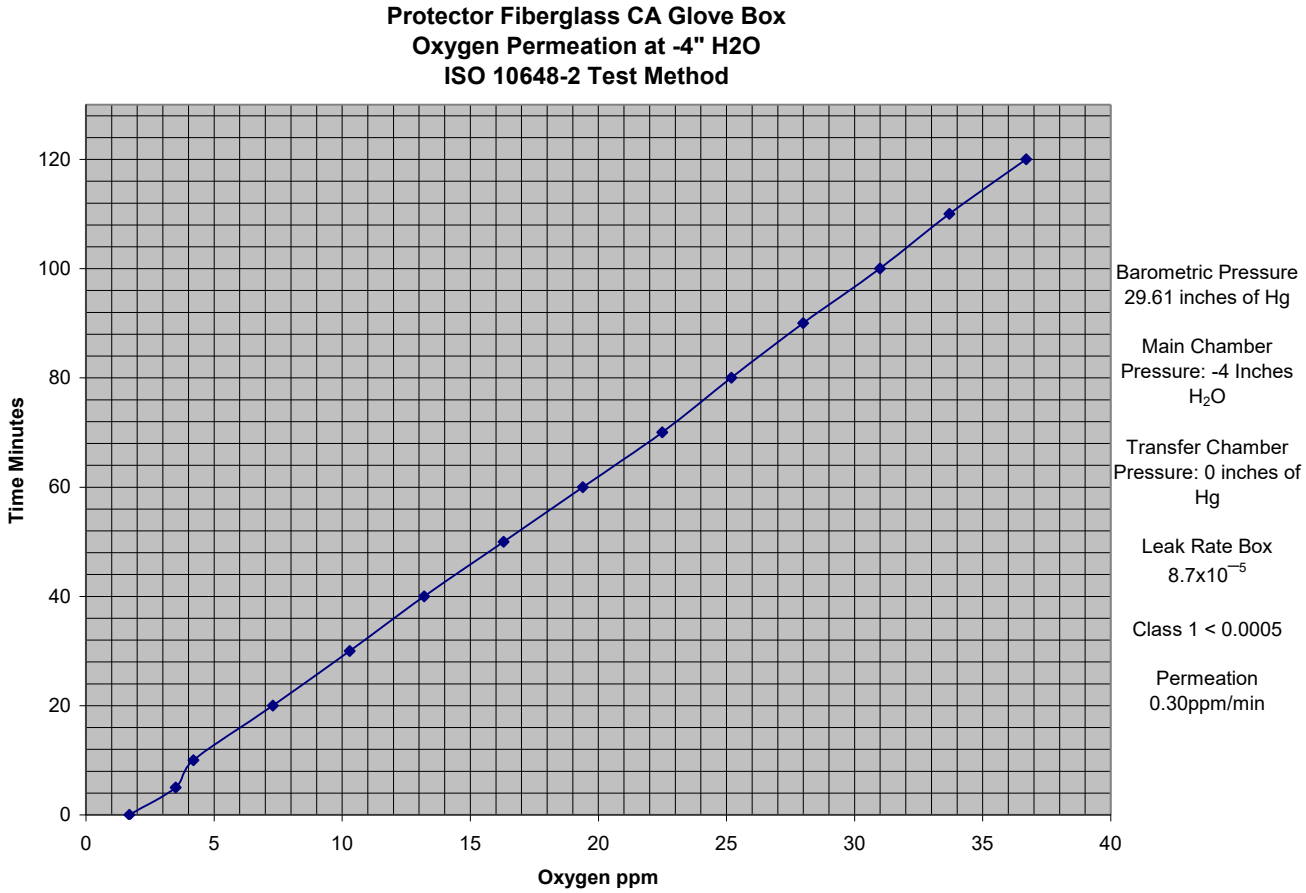

Results were attained at Labconco Corporation under controlled conditions. Actual results may vary.

Figure 3-10

The validation requirements and required testing instruments for all applications shall be determined by the end user and Safety Officer. Other validation test methods such as pressure leak decay tests may be conducted per ISO 10648-2 standards. The pressure leak decay test may be performed, but the pressure inside the glove box must be adjusted accurately for temperature and barometric pressure.

These pressure leak decay tests are conducted under negative pressure of -250 Pa (-1" water gauge) for operational use or -1000 Pa (-4" water gauge) for the acceptance test; the pressure leak decay tests are usually performed under stable barometric pressure and temperature conditions to minimize the effect of these variables.

A 0.1°C fall in temperature results in an equivalent pressure change of -34 Pa or -0.14 inches of water gauge. A 0.01 inches of mercury rise in barometric pressure results in an equivalent pressure change of -34 Pa or -0.14 inches of water gauge.

Table 3-1
Classification of Glove Box Containment per ISO 10648-2

Class	Hourly Leak Rate (T_f)	Usage Example
1	$\leq 5 \times 10^{-4}$ hr^{-1}	Controlled atmosphere with high inert gas purity conditions
2	$< 2.5 \times 10^{-3}$ hr^{-1}	Controlled atmosphere under inert gas conditions or permanently hazardous atmosphere
3	$< 10^{-2}$ hr^{-1}	Permanently hazardous atmosphere
4	$< 10^{-1}$ hr^{-1}	Atmosphere which could be hazardous

The required classification of leak tightness of each glove box **must** be decided by the end user, their Safety Officer, and any oversight authorities.

Oxygen Method Leak Testing Summary (ISO 10648-2)

The method consists of measuring the increase in the oxygen concentration as a function of time inside the glove box main chamber, previously purged with an inert gas. The difference in the oxygen concentration between the end and the beginning of the test, calculated on an hourly basis, gives the hourly leak rate T_f:

$T_f = 300 * (O_{2f} - O_{2i}) / (t * 10^6)$ where
O_{2f} is the final oxygen concentration (ppm).
O_{2i} is the initial oxygen concentration (ppm).
t is the duration of the test in minutes.
300 = 60 x 100/20 where 60 represents 60 minutes in an hour and 100/20 represents 20% oxygen in normal air.

Note: Use negative pressure of 1000 Pa (-4" water gauge) for acceptance test and negative pressure of 250 Pa (-1" water gauge) for operational test.

Pressure Change Method Leak Testing Summary (ISO-10648-2)

The method consists of measuring the pressure rise per unit time after establishing a negative pressure in the main chamber of the glove box. Use -1000 Pa for the acceptance test and -250 Pa for the operational test. The hourly leak rate includes adjustments for barometric pressure and temperature changes which can be calculated as T_f:

$T_f = (60/t) * ((PnT_1/P_1Tn) -1)$ where
t is the duration of the test in minutes.
P_1 is the absolute pressure (ambient barometric pressure minus under pressure) at the first reading in Pascals.
Pn is the absolute pressure (ambient barometric pressure minus under pressure) at the last reading in Pascals.
T_1 is the temperature at the first reading in Kelvin.
Tn is the temperature at the last reading in Kelvin.
60 represents 60 minutes in an hour.
T in Kelvin is equal to degrees Celsius + 273.

Chapter 4: Performance Features and Safety Precautions

Performance Features

The Protector Controlled Atmosphere Glove Box comes fully equipped with four manual valves, pressure relief bubbler, and pressure monitoring of the main chamber and transfer chamber. Manual Control models utilize analog gauges and Auto Pressure Controller models utilize automatic control with digital LCD display gauges. Protector Controlled Atmosphere Glove Boxes are available in single width fiberglass, single width stainless steel, and double width stainless steel. The Protector Controlled Atmosphere Glove Box is designed to meet the needs of the laboratory scientists requiring an inert atmosphere for sensitive chemical operations. Labconco has engineered the Protector Controlled Atmosphere Glove Boxes to meet the ISO 10648-2 atmosphere leak specification. The Protector Controlled Atmosphere Glove Box protects the technician from hazardous materials and protects valuable laboratory materials from the effects of oxygen and moisture exposure. The Protector Controlled Atmosphere Glove Boxes provide a leak tight environment for manufacturing and chemical research procedures. See Figure 4-1 to refer to a detailed description of the Protector Controlled Atmosphere Glove Box main performance features.

1. **Fiberglass-lined models include:**
   - One piece molded fiberglass liner with clear acrylic inner and outer transfer chamber doors.
   - Performance tested to maintain oxygen levels as low as 0.4 ppm and moisture levels as low as 2 ppm.
   - Oxygen permeation <0.3 ppm/min per ISO 10648-2. Exceeds Class 1 conditions at <1.67 ppm/min.
   - Illumination exceeds 120 foot candles.
2. **Stainless steel-lined models include:**
   - Type 304 stainless steel liner with Type 304 stainless steel inner and outer transfer chamber doors. Type 304 stainless steel front panel.
   - Performance tested to maintain oxygen levels as low as 0.2 ppm and moisture levels as low as 1 ppm.

- Oxygen permeation <0.16 ppm/min per ISO 10648-2. Exceeds Class 1 conditions at <1.67 ppm/min.
- Illumination exceeds 80 foot candles.
- Doublewide models: Oxygen permeation <1.00 ppm/min per ISO 10648-2, exceeds Class 2 conditions at <8.35 ppm/min.

3. **Basic Manual Control Models include:**
   - Main chamber pressure analog gauge with readings from -5 to +5 inches of water gauge.
   - Transfer chamber pressure analog gauge with readings from 0 to -29.5 inches of mercury.
   - Switch to control exterior outlet for vacuum pump connection.
4. **Auto Pressure Controller Model include:**
   - Automatic control of the main chamber pressure (-5 to +5 inches of water gauge), main chamber evacuation and filling cycles (up to 499 cycles), and transfer chamber evacuation and filling cycles (up to 199 cycles).
   - Regulation of vacuum/pressure between -5 and +5 inches of water gauge in the main chamber and between 0 and -29.5 inches of mercury in the transfer chamber.
   - Mutable, audible alarm that sounds when pressure/vacuum level is outside set limits.
   - LCD display of main chamber and transfer chamber pressure in inches of water, inches of mercury and mBar.
   - Three-position foot pedal (increase gas/fill, off, evacuation/decrease gas).
   - C.A. COM (6-Pin) port for shared vacuum pump use with the optional AtmosPure™ Re-Gen Air Purifier.

All models feature:

5. Large viewing area, 36" w x 27.6" high, provides maximum visibility. Removable viewing window is 3/8" thick, laminated safety glass. Double wide models have two viewing areas.
6. Pair of neoprene gloves, 0.015" thick, 30" long, size 9 ¾. Doublewide models include two pair. See Replacement Parts for all glove types and sizes.
7. Space-saving inner and outer transfer chamber doors that pivot upward, counterbalanced and equipped with quick-latches.
8. Four manual valves – two on the main chamber and two on the transfer chamber – for evacuating, filling and manual control. With 3/8" compression fittings and 3/8" hose barbs.
9. Factory-installed, rear-mounted, low profile stainless steel pressure relief bubbler at ±6 inches of water gauge.
10. Two rear-mounted inlet and outlet 3/4" OD compression fittings for easy connection to optional AtmosPure Re-Gen Air Purifier or other accessory drying train.
11. Interior right-hand side wall-mounted electrical duplex receptacle with 10 amp maximum (100/115 volt models) or 10 amp maximum (230 volt models) circuit load. Doublewide models include an extra interior receptacle.

12. Interior left-hand side wall-mounted pass-through plug for on-site installation of an optional accessory; electrical outlet, RS-232 port, gas/liquid port, or port for oxygen or moisture monitor.
13. Switches for light and electrical duplex.
14. Two 8" ID, epoxy-coated aluminum, double-grooved glove ports mounted 17" apart, with neoprene gaskets. Doublewide models have four glove ports.
15. Two 25-watt fluorescent lights. Doublewide models feature four 25-watt fluorescent lights.

Combination models include:

16. Combination models include all the features of the Protector Controlled Atmosphere Gove Box with Auto Pressure Control as well as all the features of Protector Filtered Glove Boxes. Through the use of manually operated valves suspended from the ceiling of the main chamber, the auto pressure control panel, and the manually operated valves on the transfer chamber, the Protector Combination Glove Box can easily be converted from a Protector Controlled Atmosphere Glove Box to a Protector Filtered Glove Box. See Figure 1-3 in Chapter 1. Consult the Protector Filtered Glove Box manual for details concerning the blower and filtration system.

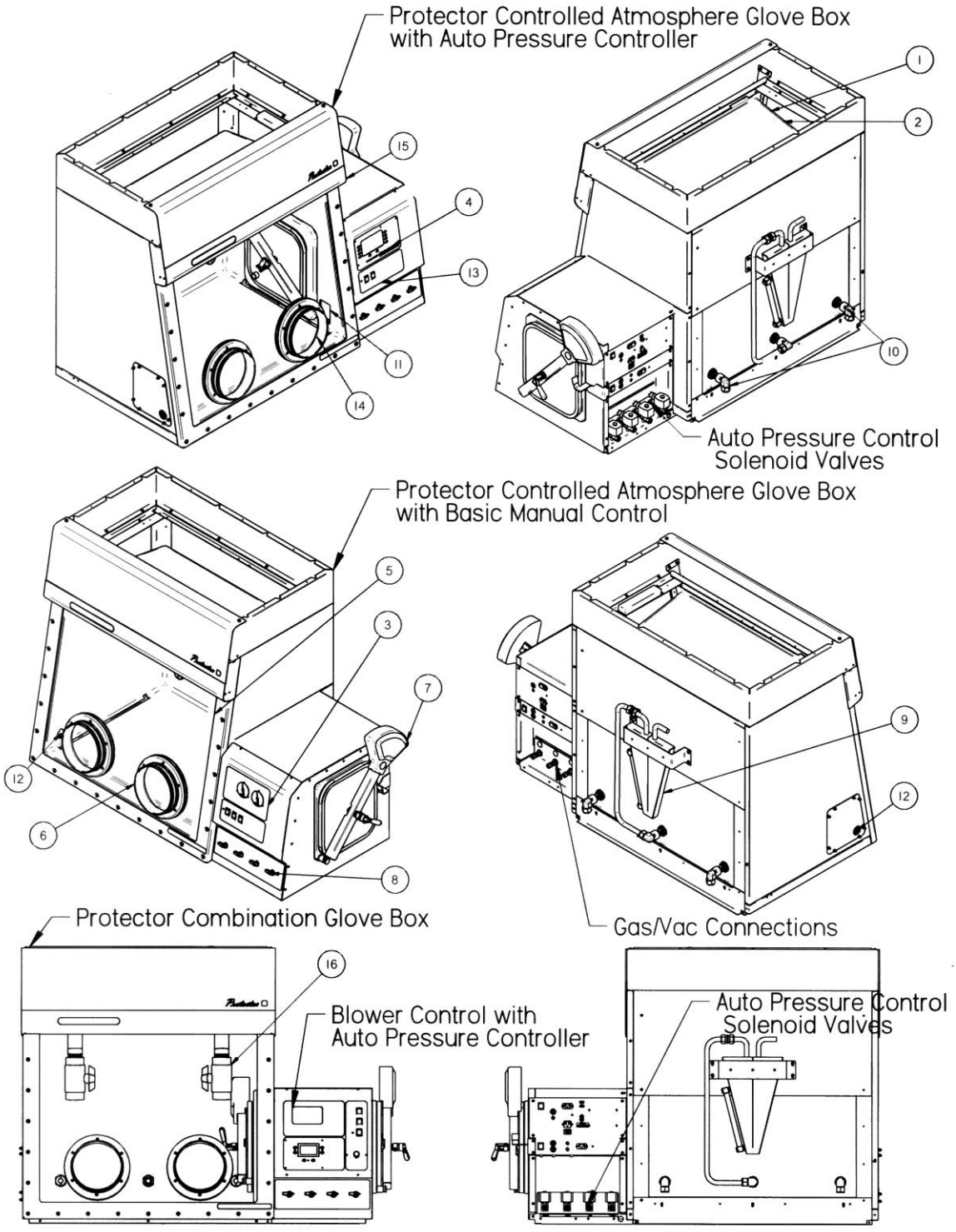

Figure 4-1
Performance Features

Safety Precautions

Before unpacking, installing, operating, maintaining, or servicing this equipment, read the following safety warnings and precautions.

Avant le déballage, l'installation, le fonctionnement, l'entretien ou la maintenance de cet équipement, lire les avertissements de sécurité et les précautions d'emploi.



CAUTION – See Manual. When this symbol is on the equipment, it indicates a caution that is detailed in this manual.
MISE EN GARDE – Voir le manuel. Lorsque ce symbole est apposé sur l'équipement, il renvoie à une mise en garde détaillée dans ce manuel.

Typographical Conventions



DANGER – An imminently hazardous situation which, if not avoided, will result in death or serious injury.
DANGER – Situation dangereuse imminente qui, si elle n'est pas évitée, peut entraîner la mort ou des blessures graves.



CAUTION – Indicates a potentially hazardous situation which, if not avoided, may result in minor or moderate injury or damage to property.
MISE EN GARDE – Signale une situation potentiellement dangereuse qui, si elle n'est pas évitée, peut provoquer des blessures mineures à modérées ou des dommages matériels.



NOTE – Advice or suggestions to help the process.
REMARQUE – Conseils ou suggestions pour le déroulement du processus.



BURN RISK (HIGH TEMPERATURE) – Air or components that will be very hot. Take care not to touch these defined areas. Failure to avoid these areas may result in moderate to severe injury.
RISQUE DE BRÛLURE (TEMPÉRATURE ÉLEVÉE) – Air ambiant ou composant devenant très chaud. Veiller à ne pas toucher ces zones délimitées. L'absence de précaution pour éviter ces zones peut entraîner des blessures modérées, voire graves.



EXTREME COLD (LOW TEMPERATURE) – Air or components that will be very COLD. Take care not to touch these defined areas. Failure to avoid these areas may result in moderate to severe injury.
FROID INTENSE (TEMPÉRATURE BASSE) – Air ambiant ou composant devenant très froid. Veiller à ne pas toucher ces zones délimitées. L'absence de précaution pour éviter ces zones peut entraîner des blessures modérées voire graves.



PINCH POINT – Areas or components that can pinch or cut. Take care not to touch these defined areas.
POINT DE PINCEMENT – Zones ou composants présentant un risque de pincement ou de coupure. Veiller à ne pas toucher ces zones délimitées.



MOVING PARTS – Areas or components that contain moving parts. Take care not to touch these defined areas.
PIÈCES MOBILES – Zones ou composants contenant des pièces mobiles. Veiller à ne pas toucher ces zones délimitées.



RISK OF ELECTRICAL SHOCK – The specified procedure or area poses a risk of electrical shock. ALWAYS disconnect main power cord or electrical supply before proceeding.
RISQUE DE CHOC ÉLECTRIQUE – La procédure ou la zone spécifiée présente un risque de choc électrique. TOUJOURS débrancher le cordon d'alimentation secteur ou l'alimentation électrique avant toute intervention.



FLAMMABLE / NO SOLVENTS – Do not place flammable liquids or solvents in this product.
INFLAMMABLE / PAS DE SOLVANTS – Ne placez aucun liquid inflammable dans cette produit.



LIFTING HAZARD – Do not lift or move this equipment without assistance.
DANGER DE LEVAGE – Ne pas soulever ou déplacer cet équipement sans assistance.



MAGNETIC FIELD IN USE – Magnets or magnetic field present.
CHAMP MAGNETIQUE UTILISE – Présence d'aimants ou de champ magnétique.



DO NOT TOUCH – Components or areas indicated are sensitive and will suffer damage if touched. Take care not to touch these defined components or areas. Failure to avoid these areas will result in damage to the product.
NE PAS TOUCHER – Les composants ou les zones indiquées sont sensibles et subiront des dégâts s'ils sont touchés. Veiller à ne pas toucher ces composants ou zones délimité(e)s. L'absence de précaution pour éviter ces zones endommagera le produit.



TOOL REQUIRED – Tool required to access specified area.
OUTIL NÉCESSAIRE – Outil nécessaire pour accéder à la zone spécifiée.

General Safety Precautions

Follow all the safety precautions described in this section.



Before removing any panels which require a tool for removal, ALWAYS disconnect the main power cord or electrical supply. Failure to remove all electrical power before proceeding will result in moderate to serious injury, death, or damage to property.
Avant le retrait d'un panneau nécessitant l'utilisation d'un outil, TOUJOURS débrancher le cordon d'alimentation secteur ou l'alimentation électrique. Le non-respect de la consigne consistant à couper complètement l'alimentation électrique avant toute intervention peut entraîner des blessures graves, la mort ou des dommages matériels.



Never contact moving parts with your person. Failure to avoid moving parts will result in moderate to serious injury, death, or damage to property.
Ne jamais toucher les parties mobiles. Le non-respect de la consigne consistant à éviter les pièces mobiles peut entraîner des blessures graves, la mort ou des dommages matériels.



Never misuse this product. Never disable, override, or otherwise bypass safety guards, panels, switches, sensors or alarms. Doing so will result in moderate to serious injury, death, or damage to this product or property.
Ne jamais utiliser ce produit à mauvais escient. Ne jamais désactiver, annuler ou contourner les capots, panneaux, interrupteurs, capteurs ou alarmes de sécurité. Ceci entraînerait des blessures graves, la mort ou des dommages matériels à ce produit ou à d'autres biens.



If the unit is not operated as specified in this manual it may impair the protection provided by the unit.
Si l'unité n'est pas utilisée comme spécifié dans ce manuel il peut diminuer la protection fournie par l'unité.



Do not position the unit so that it is difficult to operate the main disconnect device.
Ne placez pas l'appareil de sorte qu'il est difficile de faire fonctionner le dispositif principal de déconnexion.



Do not lift or move this equipment without assistance.
Ne pas soulever ou déplacer cet équipement sans assistance.

Safety Precautions for this Product

Follow all the safety precautions described in this section.



Because air from the work area is dispersed directly into the laboratory, the glove box should never be used in conjunction with biohazardous material, toxins, or radionuclides. The operator and qualified safety officer(s) must carefully assess the risk associated with any operation performed in a glove box.
Étant donné que l'air de la zone de travail est dispersé directement dans le laboratoire, glove box nch ne doit jamais être utilisé en conjonction avec des matières présentant un danger biologique, des toxines ou des radionucléides. L'opérateur et le(s) responsable(s) de la sécurité qualifié(s) doivent soigneusement évaluer le risque associé à toute opération effectuée dans un glove box.



The glove box should be certified by a qualified certification technician before its initial use. The glove box should be recertified whenever it is relocated, serviced, or at least annually thereafter.
Le glove box doit être certifié par un technician de certification qualifié avant la première utilization. L'hotte doit être certifié à nouveau chaque fois qu'il est déplacé, reparé ou au moins une fois par an par la suite.



Some components of the glove box should only be serviced by a qualified certification technician. Ensure that the unit is connected to electrical service in accordance with local and national electrical codes. Failure to do so may create a fire or electrical hazard. Do not remove or service any electrical components without first disconnecting the glove box from electrical service.
Certains composants de la glove box ne doit être réparé que par un technician de certification qualifié. Assurez-vous que l'appareil est connecté à un service électrique qui est en conformité avec les règlements de sécurité locaux et nationaux. Non-respect des règlements peut causer un incendie ou autre danger électrique. Ne pas enlever ou réparer des compasants électriques sans débrancher l'hotte du service électrique.



Electrical outlets in the glove box are restricted to 5 amps (100-115v) or 3 amps (230v) maximum current.
Prises électriques dans l'armoire sont limitées à 5 (100-115v) o 3 (230v) courant maximum ampères.



Do not use any detachable power cord that is not adequately rated for the unit. Ne pas utliser un fil électrique amovible qui n'est pas du tension nominale de l'appareil.



Avoid the use of flammable gases or solvents in the glove box. Care must be taken to ensure against the concentration of flammable or explosive gases or vapors. An open flame should NOT be used in the glove box. Open flames will disrupt airflow patterns, burn the HEPA filter and/or damage the filter's adhesive. Gases under high pressure should not be used in the glove box, as they may disrupt its airflow patterns.



The media of HEPA filters is fragile and should not be touched. Avoid puncturing the HEPA filter during installation or normal operation. If you suspect that a HEPA filter has been damaged, DO NOT use the glove box; contact a local certification agency or Labconco at 800-821-5525 or 816-333-8811 for re-certification information.



The HEPA filter in the glove box will gradually accumulate airborne particulate matter from the room. The rate of accumulation will depend upon the cleanliness of the room air, and the amount of time the glove box is operating. In typical installations and usage, the HEPA filters will last two to five years before requiring replacement.
Le filtre HEPA du glove box accumulera progressivement les particules en suspension dans l'air de la pièce. Le taux d'accumulation dépendra de la propreté de l'air ambiant, de la durée de fonctionnement du glove box et de la nature du travail effectué dans le glove box. Dans les installations et l'utilisation typiques, les filtres HEPA dureront de deux à cinq ans avant de devoir être remplacés.



Proper operation of the glove box depends largely upon the operator's work habits. Consult *Section 5: Using Your Glove Box* further details.
Le bon fonctionnement du glove box dépend en grande partie de l'emplacement du glove box et des habitudes de travail de l'opérateur. Consultez les sections d'installation et de fonctionnement normal de ce manuel pour plus de détails.



Do not use abrasive cleaners, bleach, or solvents, as they may damage the work surface or other interior surfaces.
Avant utilisation, n'utilisez pas de nettoyants abrasifs, d'eau de javel ou de solvants, car ils pourraient endommager la surface de travail ou d'autres surfaces intérieures.



When surface disinfecting the glove box:

- Avoid splashing the disinfecting solution on skin or clothing.
- Ensure adequate ventilation.
- Carefully follow the disinfectant's safety instructions.
- Always dispose of disinfecting solutions in accordance with local and national laws.

DO NOT allow disinfectants with high concentrations of free chlorine to contact stainless steel components of the glove box for a long period of time. Free chlorine will corrode stainless steel after extended contact.

Additional Precautions for this Product

1. It is the responsibility of the user to determine the suitability of this product for the intended applications. Consult your Safety Officer for application review.
2. Although the glove box has been engineered to maintain optimum operator safety, caution should always be used while working. Prior to using the glove box, check to make sure that the main chamber pressure is set for comfortable glove manipulation. **Changes in glove position will affect pressure in the glove box.**
3. Use good housekeeping in the glove box at all times. Clean up spills immediately. Periodically clean interior per your standard operating procedures for the specific chemicals in use.
4. **This product is NOT designed or intended to be explosion proof.** It is the responsibility of the user to determine and avoid the lower explosive limits and flammability of the enclosed gases used within the controlled atmosphere glove box. The user is responsible for taking proper precautions to prevent equipment damage or injury due to an explosion or combustion of chemicals.
5. The use of flammable gases or solvents in the glove box should be limited. Care must be taken to ensure against the concentration buildup of flammable or explosive gases. **DANGER: The addition of oxygen inside the glove box must be avoided to prevent explosion, death, or serious injury.**
6. Perchloric acid use in this glove box is prohibited.
7. Radioisotope material usage in the glove box should be approved by your Safety Officer.
8. A qualified certification technician should test the glove box before it is initially used.
9. The glove box should be recertified at least annually after installation.
10. The use of safety goggles, protective clothing, and any other personal protective equipment recommended by your Safety Officer should be observed.
11. **The pressure relief bubbler provides protection from over or under pressurization and should be filtered and/or ducted to the outside if working with hazardous materials.** Consult your Safety Officer. When operating the transfer chamber gas inlet and vacuum outlet valves, insure the inner transfer door is closed. Failure to do so can result in the pressure relief valve opening, thereby, introducing laboratory air into the glove box main chamber or glove box air into the laboratory. All filters and ducting are **NOT** included with the glove box.

12. **All powders, gases, and particulates removed by the operation of the vacuum pumps connected to this glove box are to be filtered and/or ducted to the outside.**
13. **Exhaust vacuum pumps should be filtered and/or ducted to the outside when using hazardous materials.** Consult your Safety Officer. Manipulations that generate gases or vapors from toxic chemicals or radionuclides, must be evaluated carefully from the standpoint of buildup to dangerous levels. The decontamination of the glove box and compliance with applicable regulations is the responsibility of the operator and safety officer. Venting or filtering of vacuum pump exhaust is the operator's responsibility.
14. Ensure that the glove box is connected to electrical service in accordance with local and national electrical codes. Failure to do so may create a fire or electrical hazard. Do not remove or service any electrical components without first disconnecting the glove box from electrical service.
15. Ensure only trained operators use the glove box. New users **must** review the User's Manual and become familiar with the operation of the glove box.
16. Tag the glove box with appropriate warnings, if work inside the glove box is hazardous or needs to remain untouched. Tag the glove box if it requires servicing.
17. Consult your Safety Officer before removing any hoses to vacuum pumps, gas lines, pressure gauges, or exhaust hoses; they may be contaminated with chemicals used inside the glove box.

Chapter 5:
Using Your Glove Box

Now that the installation of your glove box is completed, you are ready to use it.

Read this chapter to learn about:

- Routine Daily Work Procedures.
- Hazardous Use with Chemicals.
- Prohibited Acid Use.
- Auto Pressure Controller operation.

Routine Daily Work Procedures

Planning

- Thoroughly understand procedures and equipment required before beginning work. Work from a written plan.
- Consult your Safety Officer for personal protective equipment recommendations and operating pressure confirmation.

Start-up

- Basic start-up procedure includes: turning on the vacuum pump, opening the inert gas valve on the gas supply tank, and turning on the glove box light. The accessory AtmosPure Re-Gen Gas Purifier can be started once an inert atmosphere below 5000 ppm is established.

Loading Materials and Drying Train Set-Up

- Load only the materials and equipment required for the procedure. Do not overload the glove box. When loading, ensure the inner door is closed before opening the outer door. Then close the outer door.

- Perform evacuation and fill cycle on the transfer chamber using the vacuum outlet and gas inlet valves. Depending on the vacuum level achieved, it takes 1-5 cycles to reduce oxygen and moisture levels below 1%. Porous materials being transferred may require longer sustained vacuum purges to remove the oxygen and moisture trapped in the materials.
- After transferring materials to the main glove box chamber, perform the required evacuation and fill cycles (1-499) on the main chamber using the vacuum outlet and gas inlet valves. Normally 75-100 evacuation and fill cycles will reduce moisture and oxygen levels below 1% (see Appendix D). An additional 100 cycles will reduce moisture and oxygen levels below 0.3% or 3,000 ppm. The use of the accessory AtmosPure Re-Gen Gas Purifier can now be turned on. **The use of external glove port covers will expedite the evacuation and fill cycle times and help maintain low moisture and oxygen levels when the glove box is not in use.**
- Maintaining a slight main chamber pressure difference of -1" to +1" water gauge can help to preserve the glove box atmosphere. The moisture/ oxygen permeation is reduced at slight pressure differences.
- The AtmosPure Re-Gen Gas Purifier is **required** to further reduce and maintain oxygen and moisture levels below 0.3%. **The AtmosPure Re-Gen Gas Purifier can maintain oxygen levels below 1 ppm and moisture levels below 1 ppm.**
- Monitoring moisture and oxygen levels inside the glove box is **recommended** by using accessory monitors (see Chapter 7).

Work Techniques

- Segregate all clean and contaminated materials in the work area.
- Maintain work at a slightly negative pressure if working with hazardous compounds.
- Continuously run the AtmosPure Re-Gen Gas Purifier to **preserve** the inert atmosphere if so desired.

Transferring Materials to the Outside

- All open chemical weigh vessels or containers **must** be sealed before removing materials from the glove box main chamber.
- Upon completion of work, the main glove box chamber **must** be evacuated and filled approximately 5-10 times to remove airborne contaminants from the work area. The exact number of cycles should be determined by your Safety Officer.

- Objects in contact with previously contaminated internal atmospheres **must** be surface decontaminated or bagged before removal from the glove box through the transfer chamber.
- After placing materials to be removed in the transfer chamber and locking the internal door, the transfer chamber **must** be evacuated and filled approximately 1-5 times depending on vacuum level achieved. This ensures the removal of any remaining airborne contaminants before the outer door is opened. **Never** apply a high vacuum purge on sensitive electronic moisture and oxygen monitors. The exact number of cycles should be determined by your Safety Officer.

Shutdown

- To help preserve the controlled atmosphere, leave the glove box main chamber under slight pressure differences and continuously run the AtmosPure Re-Gen Gas Purifier. The use of the accessory external glove port covers can assist in preserving the inert atmosphere.
- Keep the outer door closed when not in use.

Hazardous Use with Chemicals

Hazardous chemicals may be used safely only when the glove box vacuum pump and pressure relief bubbler are both properly vented and/or filtered to the outside. Consult your Safety Officer for proper venting and filtering of the vacuum pump exhaust and the pressure relief valve for your application.

Prohibited Acid Use

On stainless steel models, the glove box interior **must** not be exposed to mineral acid use. The glove box life span will be limited with use of mineral acids.

NOTE: Labconco makes no claims about corrosion resistance of the glove box with mineral acid use and warranties will become void.

Auto Pressure Controller Operation

The Auto Pressure Controller performs three automatic modes on the glove box. First, it cycles the evacuating/filling process in the main glove box chamber up to 499 cycles and in the transfer chamber up to 199 cycles. Second, it regulates vacuum/pressure between -5 and +5 inches of water gauge in the main glove box chamber through the glove box pressure control program mode. Third, it regulates vacuum in the transfer chamber between 0 and -29 inches of mercury during the evacuating/filling process.

Front Panel Description

The front panel includes a large display screen and touchpad keys that are adjacent to the LCD display. The operation of these keys will be defined by text on the display screen (LCD). Each key may perform a different operation depending on the control mode selected.

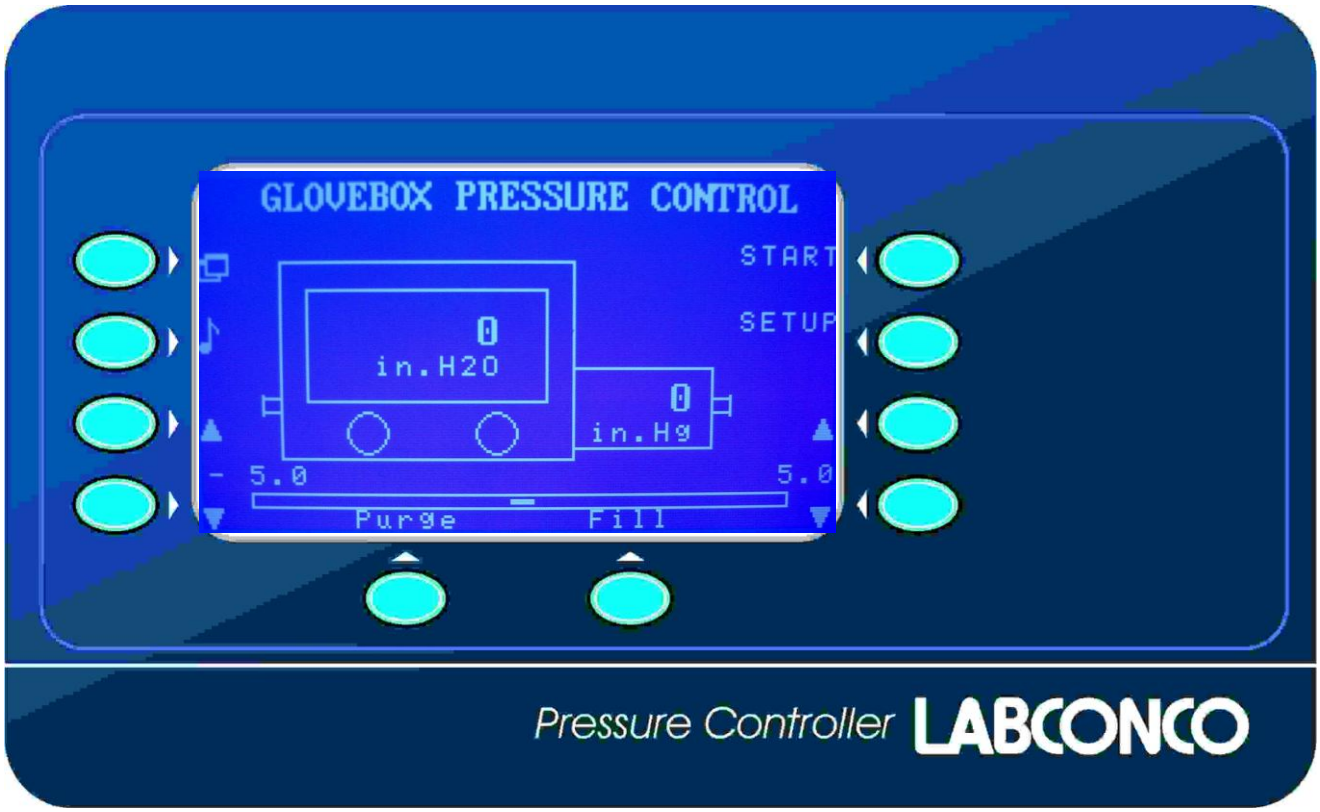

Rear Panel Description

The rear panel includes the power inlet and circuit breakers, power on/off switch, the outlet receptacle for plugging in a vacuum pump (the receptacle varies for 115 volt and 230 volt models), and electrical connection for the glove box pressure control footswitch. The 4 electric solenoid valves that provide control of the glove box Main Chamber gas in/gas out, and Transfer Chamber gas in/gas out are also located on the rear panel. See the separate mechanical installation instructions for plumbing connections to these valves in Chapter 3 and Figure 3-4.

Main Modes of Operation

The Labconco Glove Box Pressure Controller display has four main screens that provide access to the 4 modes of operation listed below.

1.) Glove Box Pressure Control Mode
2.) Glove Box Purge and Fill Mode
3.) Transfer Chamber Purge and Fill Mode
4.) Setup Mode

Press the MODE key at the upper-left hand corner of the display screen to switch between each of these four operation modes. Please be aware that if one of the glove box modes is running/started, other glove box operation modes cannot be used. For example, if the Glove Box Pressure Control mode has started (using the start key), the menu page for the Glove Box Purge/Fill mode cannot be used – this prevents operational control conflicts from occurring at the same time.

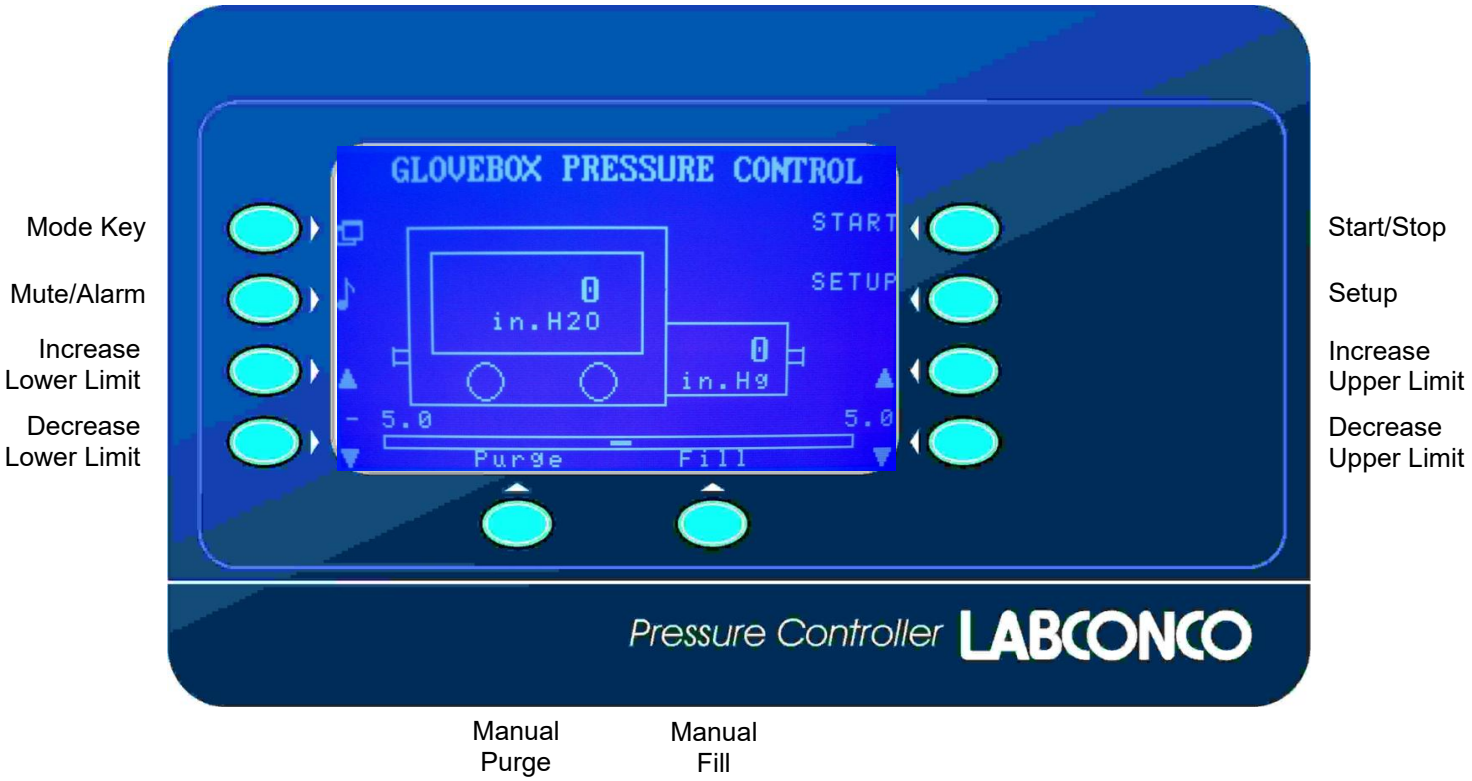

Glove Box Pressure Control – Operation Mode 1

The Pressure Control mode will allow the user to set a high pressure limit up to +5 inches water column and a low pressure limit to -5 inches water column [+/- 12.6 mBar or +/- 1245 Pacals]. Set these high and low pressure limits with the keys adjacent to the "UP" and "DOWN" arrows on the display. Once these limits are set, and the START/STOP key is pressed, the Pressure Controller will automatically control the gas inlet valve, gas outlet valve, and the power to the outlet receptacle for a vacuum pump. Pressure in the Glove Box Main Chamber will be displayed inside the glove box icon on the display screen.

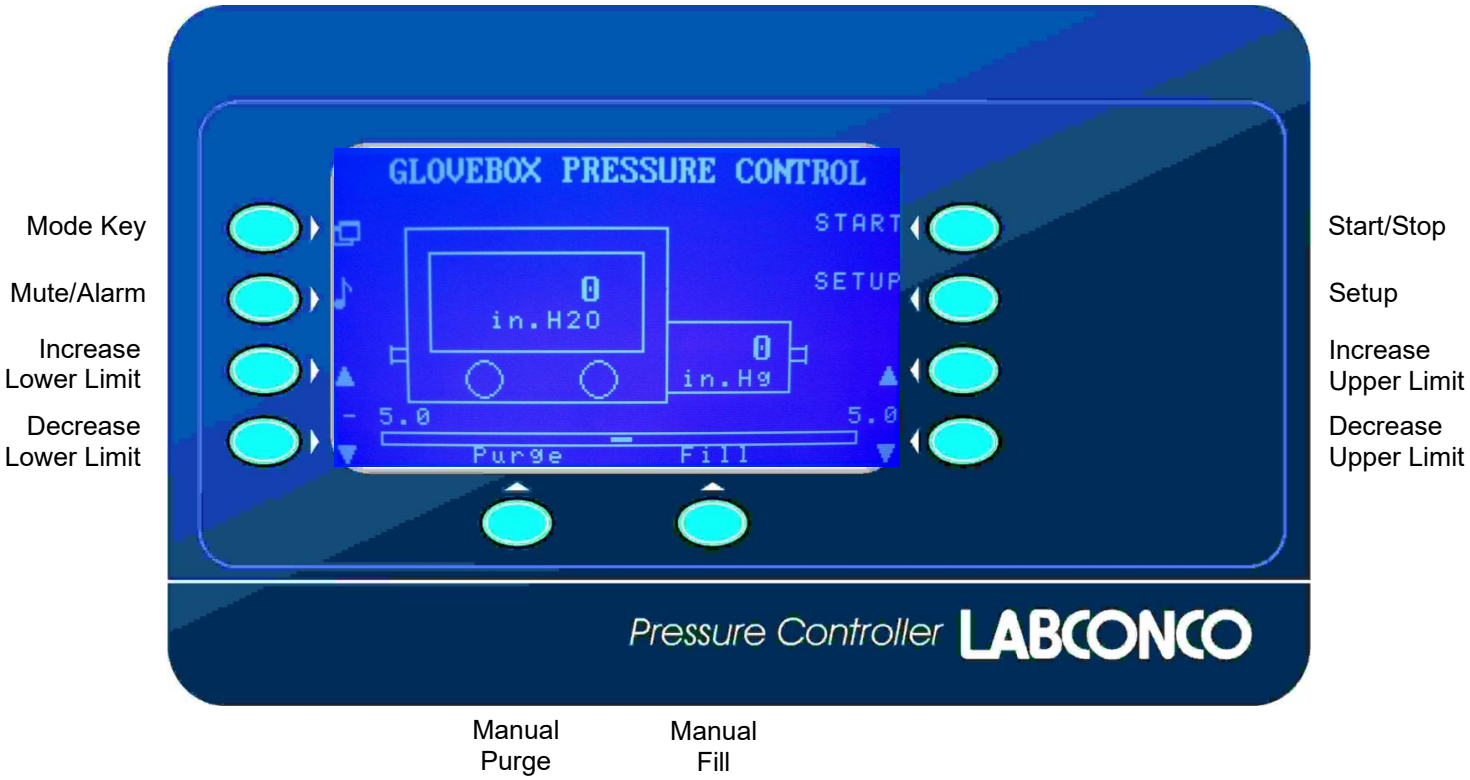

Manual control keys for evacuation "PURGE" and "FILL" (located along the bottom of the display) will allow the corresponding valves to be controlled by the user to increase or decrease the pressure inside the glove box. **Note: These manual keys will not operate the valves when the pressure is outside the limits of +/- 5 inches of water [+/- 12.6 mBar].** A three-position footswitch is included with the Automatic Pressure Controller. The footswitch provides manual foot control of the gas inlet and vacuum outlet valves. The pressure inside the glove box will be displayed inside the glove box icon on the display screen.

An audio alarm will actuate if the pressure exceeds the maximum limits of +/- 5 inches of water. An "alarm reset" key (identified by the musical icon) is provided to mute this alarm. The alarm will reset automatically when the pressure returns within +/- 5 inches [+/- 12.6 mBar].

Glove Box Evacuation (Purge)/Fill – Operation Mode 2

The Glove Box Purge/Fill mode uses the same solenoid valves on the glove box that are used in the Pressure Control Mode. The Pressure Control mode will be temporarily suspended while a "Purge/Fill" command is being executed.

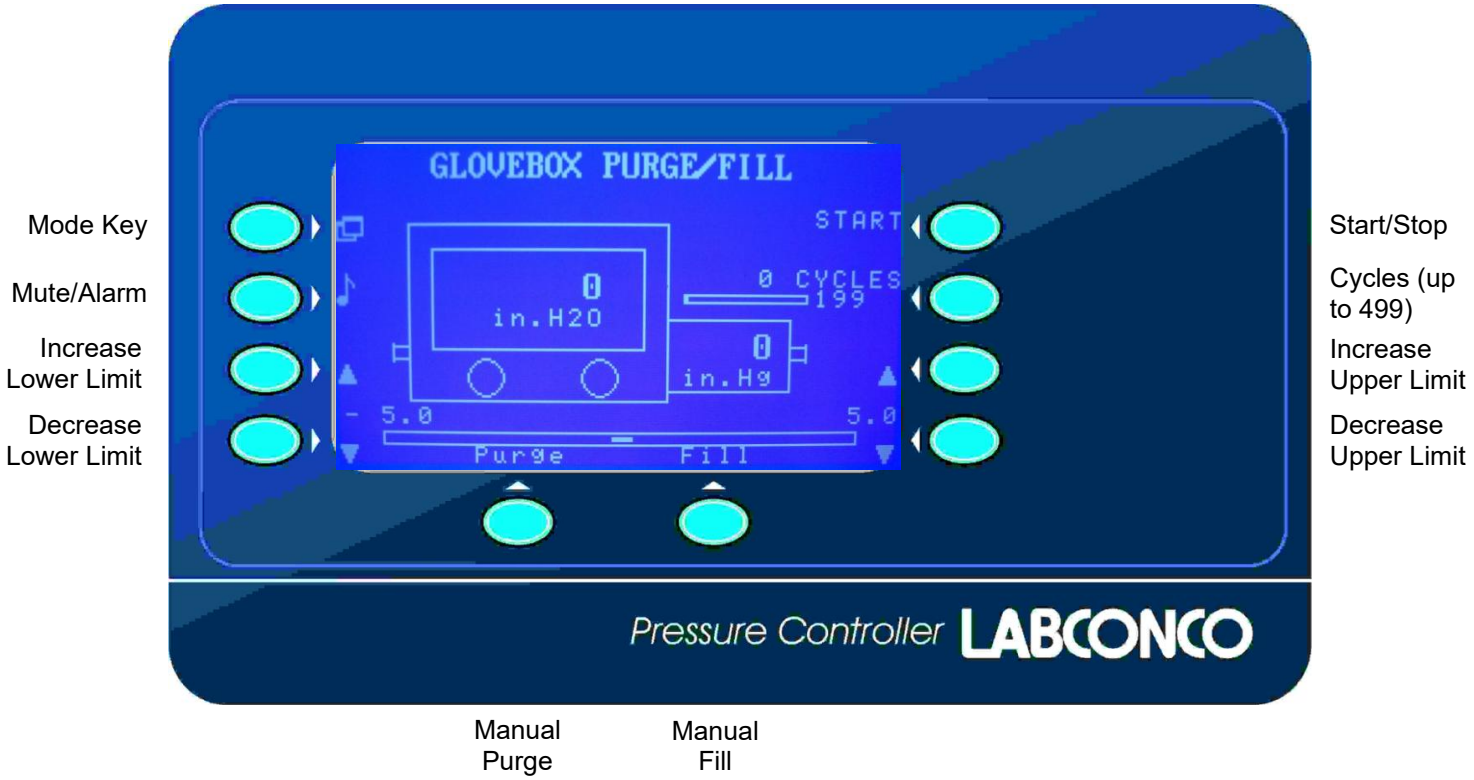

Note that this display screen looks similar to the Pressure Control mode described previously. However, the "SETUP" key has changed to a "CYCLES" key. Up to 499 cycles can be set for automatic "Purge/Fill" of the glove box main chamber by holding the "Cycles" key. To decrease the number cycles, press the "CYCLES" key to 499 cycles and go around again until a lower cycle quantity appears. Use this display screen to also set the low pressure level for purging and the high pressure level for filling by adjusting the upper and lower limit keys. The Labconco Pressure Controller allows the glove box Main Chamber pressure levels to be set to +/- 5 inches of water column [+/- 12.6 mBar]. Once the pressure limits and number of cycles have been selected, press the key adjacent to "START/STOP," and the automated purge and fill process will begin and continue for the number of cycles selected. Each cycle number will be displayed during the process. To cancel the automated purge and fill process, press the key adjacent to "START/STOP" and the process will be stopped.

Note that when the "Glove Box Purge/Fill" mode is in operation, there are no keys available to allow for system setup as the "CYCLES" key replaced the "SETUP" key. Use the "MODE" key in the upper left hand corner adjacent to the icon to return to the "Glove Box Pressure Control" screen to use the "Select" mode.

Transfer Chamber Evacuation (Purge) and Fill – Operation Mode 3

The Transfer Chamber Purge/Fill mode controls the pressure changes inside the transfer chamber. Pressure in the transfer chamber will be displayed inside the transfer chamber icon on the display screen. This operation mode controls the gas inlet and gas outlet solenoid valves connected to the transfer chamber.

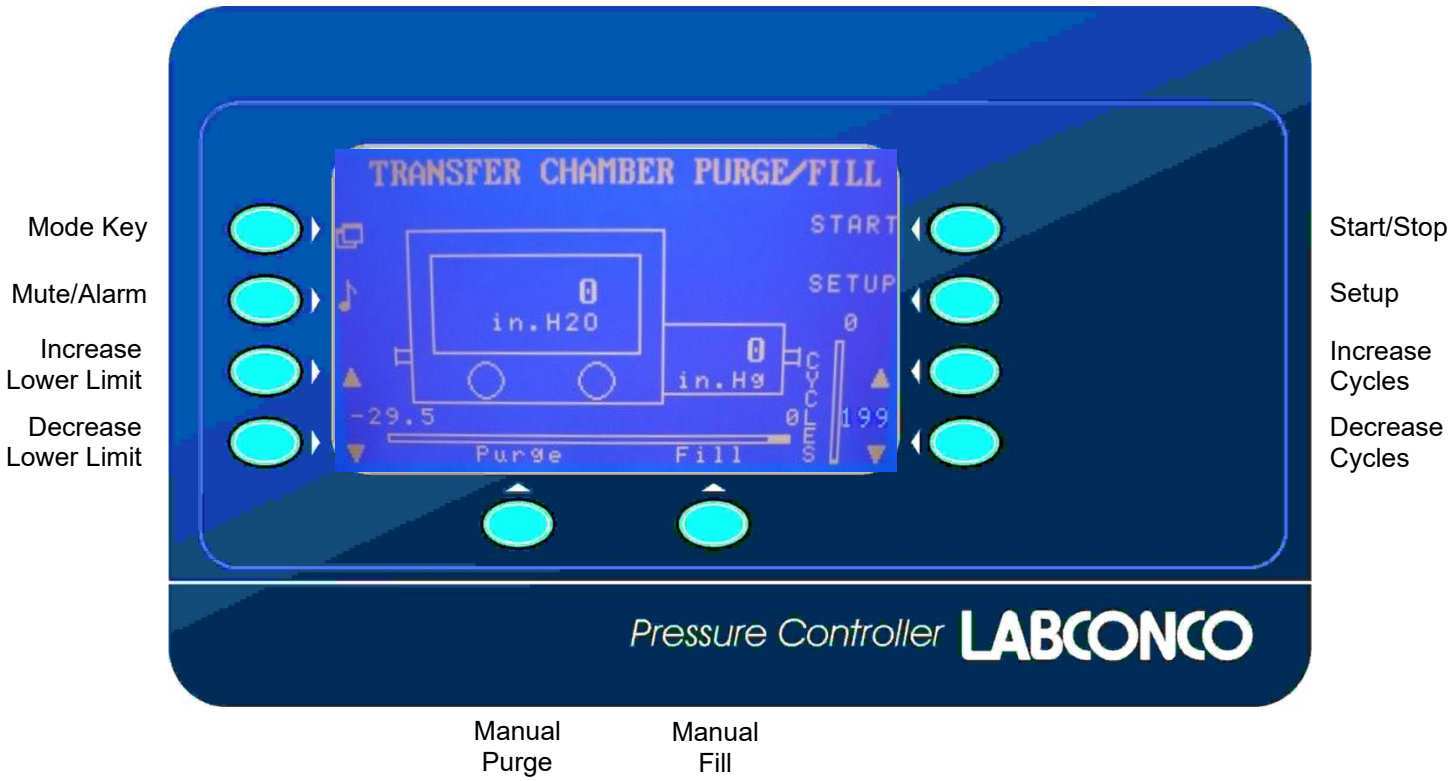

The user may select up to 199 “Purge/Fill” cycles by adjusting the cycles increase and decrease arrow keys. The user can select the level of pressure inside the transfer chamber during each purge between 0 and -29.5 inches of Mercury/Hg [0 -999 mBars] by adjusting the lower limit keys. Once the lower pressure limit and number of cycles have been selected, press the key adjacent to “Start,” and the automated purge and fill process will begin and continue for the number of cycles selected. Each cycle will be displayed during the process. To cancel the automated purge and fill process, press the key adjacent to “Stop” and the process will be stopped.

Setup Menu – Operation Mode 4

Pressing the key opposite the word "Setup," allows access to the setup operation mode. In the setup mode, the user may select their preferred units of pressure that are displayed, restore settings back to the default state, or calibrate the pressure sensors. The keys adjacent to the up and down arrows on the lower right of the display are used to select one of the three options. After toggling up or down, push the NEXT key to select the option.



Option 1

Units of Measure: If this option is selected, the key adjacent to "Next" is used to select pressure units of inches of water, inches of mercury or mBar.

Helpful conversions are as follows:

1 mBar = .39 inches of water column
1 mbar = .0292 inches of mercury
1 inch of water = 2.52 mBar = .0737 inches of mercury
1 inch of mercury = 34.25 mBar

All pressures are measured with respect to atmosphere pressure.

Option 2
Restore Defaults: The restore defaults option restores all control settings to the initial programmed settings which are listed in the back of these operating instructions.

Option 3
Calibration: The pressure sensors inside the controller can be calibrated using atmospheric pressure (single point calibration) or atmospheric pressure and a specific pressure level (two point calibration). Two point calibration provides increased accuracy; however, Labconco recommends that only the single point calibration be used because it does not require a calibrated pressure measurement standard. When "Calibration" is selected, the display screen below appears. The keys adjacent to the up and down arrows on the lower right of the display are used to select one of the options. After toggling up or down, push the NEXT key to select the option.



Note: If option 2 or 3 above is selected, **an accurate**, traceable pressure measuring device **must be** connected to the Labconco pressure sensors. Consult Labconco for further instructions for this type of calibration.

Option 1 above is normally selected. Both doors must be open so atmospheric pressure is available to both the glove box main chamber and transfer chamber. Select the NEXT key to advance the screen to sensor offset for Option 1. The display screen changes are shown on the next page for Option 1.

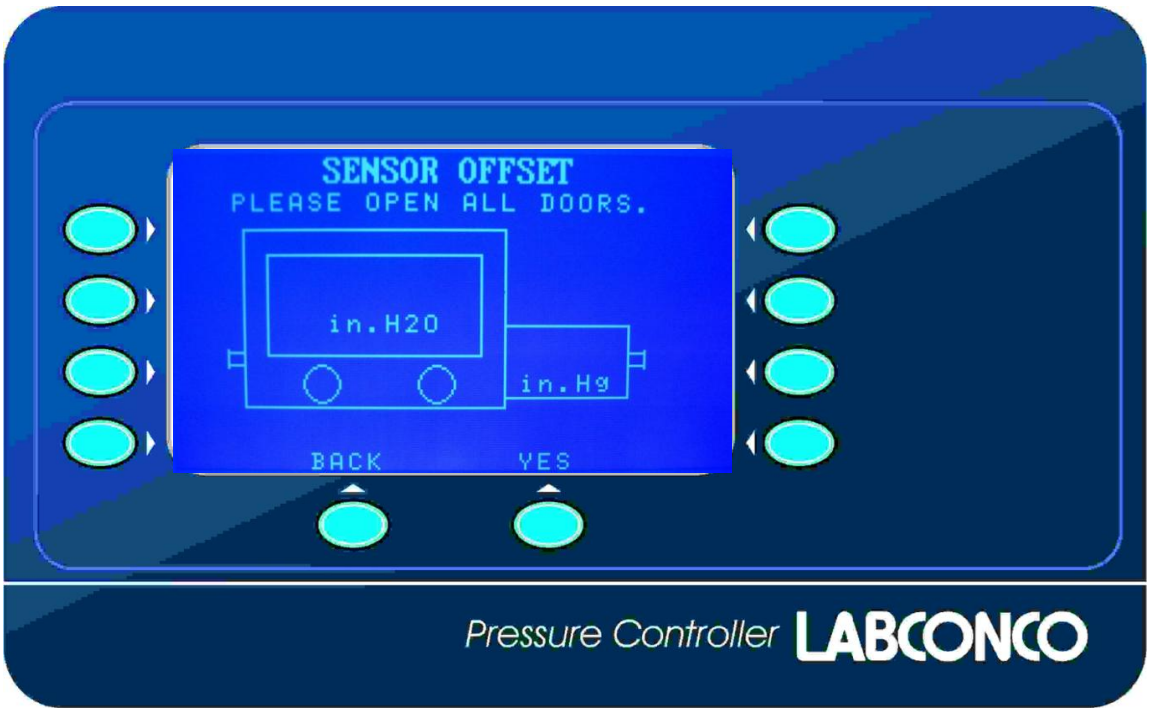

Back to Previous Screen

Yes, All Doors Open

To calibrate the pressure sensors for both chambers, the doors must be open so that atmospheric pressure is present at both sensors. This is the “zero point” for both sensors. Both pressure gauges on the glove box will also read “zero.”

With both doors open, press the key adjacent to “Yes.” Once this is done, the following display screen on the next page appears:

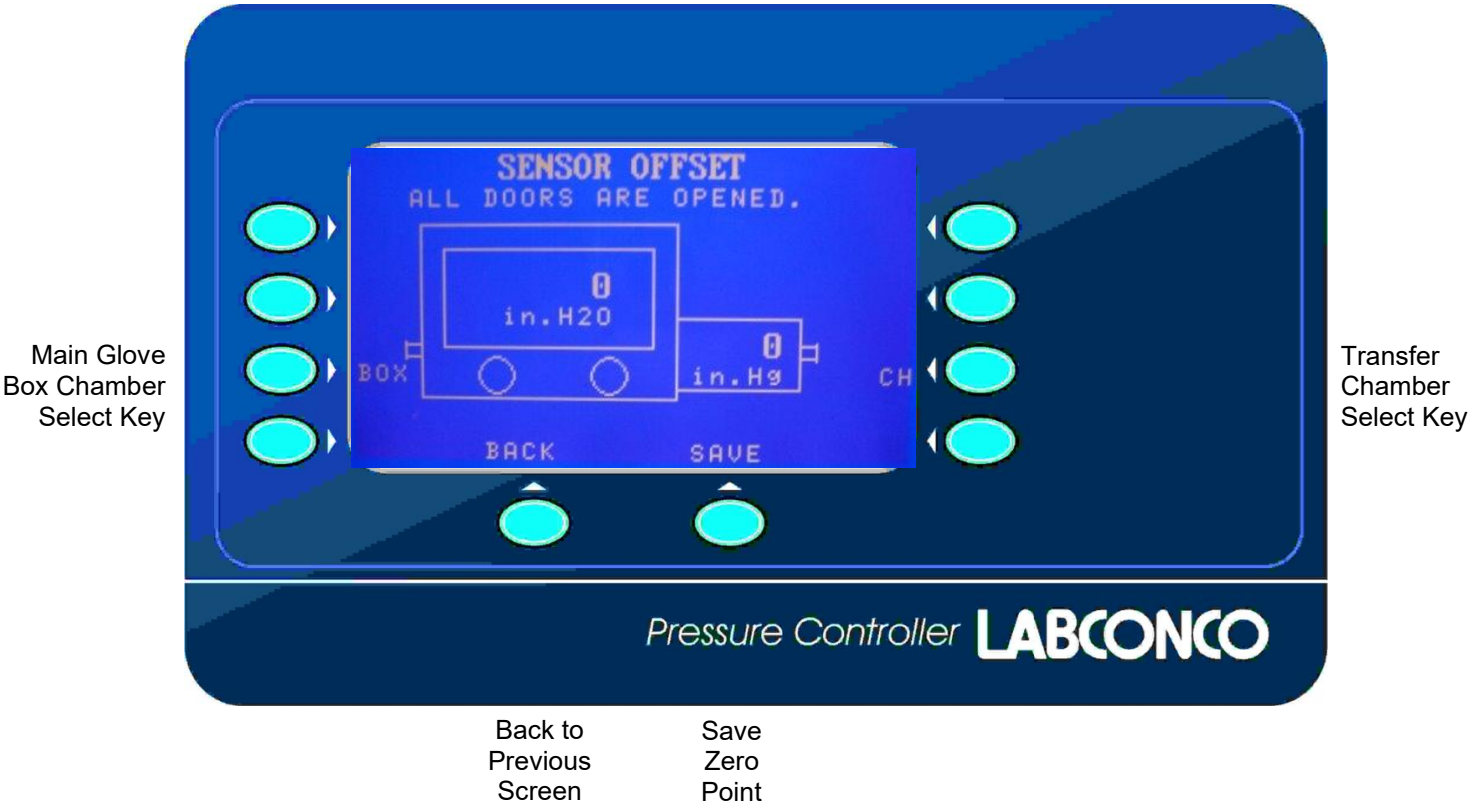

This display screen confirms that the doors are open and the sensors are ready for auto-zeroing. First, select the Main Glove Box Chamber key (Box) and wait for complete calibration to zero pressure. Next, select the Transfer Chamber key (CH) and wait for complete calibration to zero pressure. Once the key adjacent to "Save" is pressed, the new sensor offset valves for both chambers are stored, and this pressure becomes the zero point for both chambers. Select the back key two times when calibration is complete to return to the three main modes of operation.

Pressure Control Foot Switch (Labconco #5243600)

The three position (increase gas/fill, off, purge/decrease gas) foot switch should be plugged into the back panel of the Labconco Pressure Controller. The Foot Switch has the same effect as pressing the Purge and Fill keys on the display panel. The action of the Foot Switch depends on what mode of operation is shown on the display. If the transfer chamber screen is shown on the display, the Foot Switch will control the Transfer Chamber gas in and gas out valves. If the display shows the Glove Box Pressure Control or the Glove Box Purge/Fill, the Foot Switch will control the Glove Box Main Chamber gas in and gas out valves. The foot switch will not work when the pressure/vacuum inside has exceeded the user preset limits shown on the display.

Auto Pressure Controller Specifications

Glove Box Pressure Control	**Operating Range**	**Default Settings**
Pressure Control Limits	-5 inches of water column to +5 inches of water column; [+/- 12.6 mBar]	+/- 5 inches of water column; [+/- 12.6 mBar].
Manual Control Available	Purge (Gas out); Fill (Gas in)	
Audio Alarm level	Whenever pressure outside limits	
Glove Box Purge/Fill		
Purge/Fill Pressure Limit	+/- 5 inches of water column; [+/- 12.6 mBar].	+/- 5 inches of water column; [+/- 12.6 mBar].
Manual Control Available	Purge (Gas out); Fill (Gas in)	
Number of Purge/Fill Cycles	0 to 499 – main chamber	1
Audio Alarm level	Whenever pressure outside limits	
Transfer Chamber Purge/Fill		
Purge Pressure Limit	-29.5 inches of Mercury/Hg [-999 mBars]	-29.5 inches of Mercury/Hg [-999 mBars]
Fill Pressure Limit	0 inches of Mercury/Hg [0 mBars](atmosphere)	0 inches of Mercury/Hg [0 mBars](atmosphere)
Number of Purge/Fill Cycles	0 to 199 – transfer chamber	1
Audio Alarm level	-29.5 inches of Mercury/Hg [-999 mBars]	Whenever pressure/vacuum outside limits

Chapter 6:
Maintaining Your Glove Box

Review this chapter on maintenance for the following:

1. Routine maintenance.
2. Initial certification.
3. Recertification.
4. Fluorescent light replacement.
5. Window replacement.
6. Solenoid valve replacement for Auto Pressure Controller, if equipped.
7. Auto Pressure Controller circuit board replacement.

Routine Maintenance Schedule

Weekly

- Wipe down the interior surfaces of the glove box with a disinfectant or cleaner, depending upon the application.
- Using an appropriate cleaner and cloth, clean the exterior surfaces of the glove box, particularly the front and top, to remove any accumulated dust.
- Chart the pressure decay of the glove box, noting the change in pressure over short time periods. Adjust as necessary for temperature and barometric pressure changes. See *Chapter 3: Validating the Glove Box*.
- If required, monitor and record oxygen and moisture levels inside the glove box with accessory monitors (see Chapter 7).
- Check inlet inert gas pressure to ensure it never exceeds 10-14 psi (69-96 kPa).

Annually

- Replace the fluorescent lamps.
- Have the glove box certified by a qualified technician. See Certification and Recertification in Chapter 6.

Initial Certification

Each Protector Glove Box has been leak tested at the factory with helium gas at positive 5" w.g. pressure; no leaks greater than 1 x 10^{-6} cc/sec are allowable. The glove box should be certified by your Safety Officer before use, with one of the two tests listed below under Recertification. See Appendix G for Labconco Helium Leak Test Method performed on all glove boxes at the factory.

Recertification

Under normal operating conditions, the glove box should be recertified at the time of installation and at least annually thereafter. The certifier should choose and perform one of the following tests. Refer to Validating the Glove Box in Chapter 3.

- Oxygen Method Leak Test per ISO 10648-2 test methods.
- Pressure Change Leak Test per ISO 10648-2 test methods.

Fluorescent Light Replacement

1. Disconnect the power. Refer to Figure 6-1 for replacement.
2. Locate the upper front panel.
3. Remove the front panel by removing two screws located at the bottom of the front panel on both sides.
4. Remove the old fluorescent lamps.
5. Reinstall the new fluorescent lamps and front panel by reversing the steps above.

Hg

THE LAMP(S) IN THIS PRODUCT CONTAIN MERCURY

Manage in accordance with local disposal laws. DO NOT place lamps in trash. Dispose as a hazardous waste. For information regarding safe handling, recycling and disposal, consult www.lamprecycle.org

CETTE LAMPE DANS CE PRODUIT CONTIENT DU MERCUE

Éliminez ou recyclez conformément aux lois applicables. Pour de l'information concernant des pratiques de manipulation sécuritaires et l'élimination sécuritaire et le recyclage, veuillez consulter www.lamprecycle.org

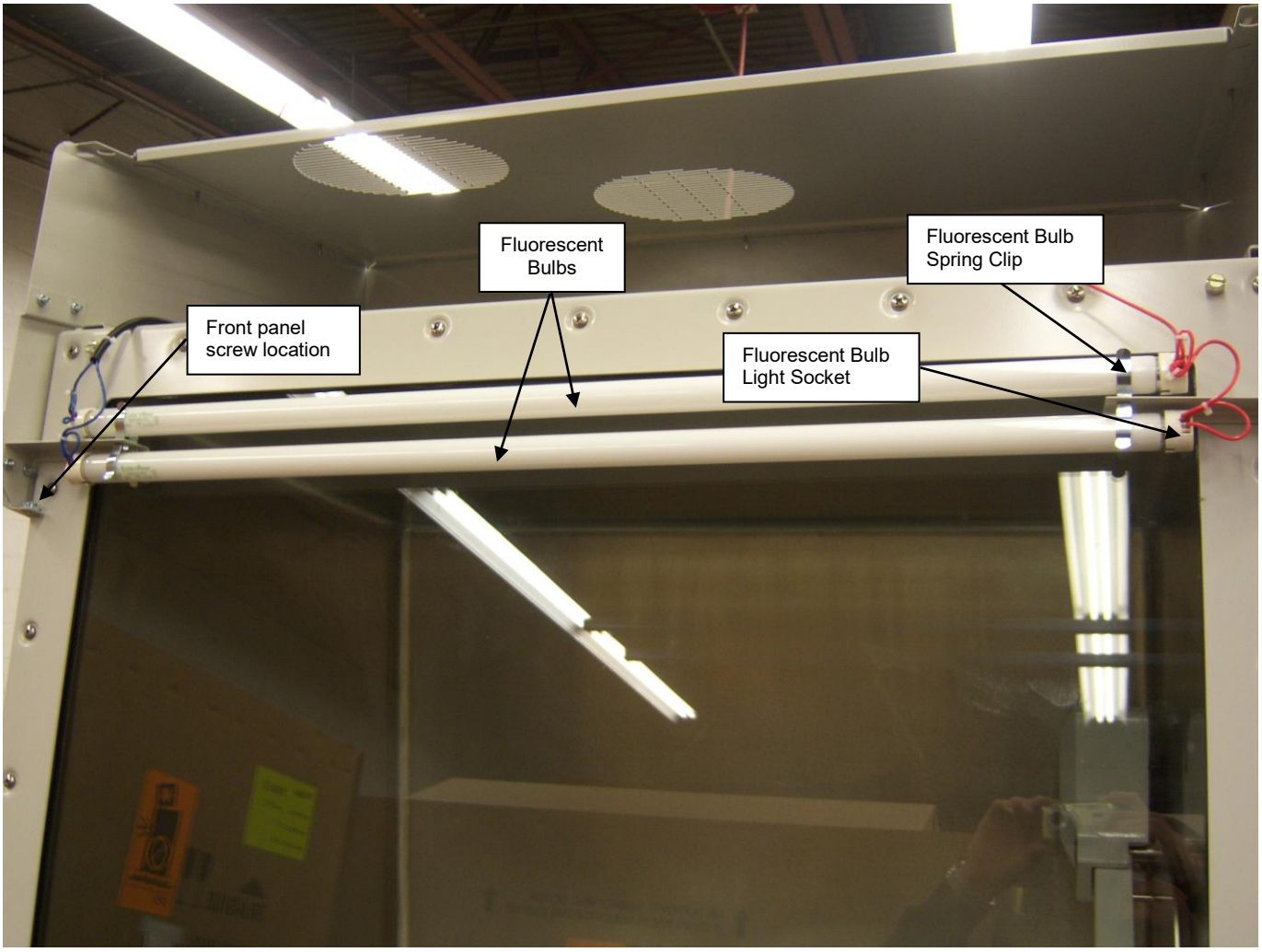

Figure 6-1
Fluorescent Lights

Window Replacement

- It is recommended to decontaminate before opening the glove box and to check with your safety officer.
- Remove 30 screws on outer cover plate by using minor turns and across from each other diagonally to reduce pressure evenly. Be careful as the screws have stainless steel lube that will stain clothing. Hold lower frame in and see if top frame will come off without glass. Frame plate may come off with window, but do not depend on gasket material to hold glass. To prevent injury to your feet or toes, do not let glass slide to floor. Glass sits on a 1/4 inch ledge and should stay as long as it is not pulled out, but do not depend on it. Clean inside of window after removal.
- If you change gasket(s), clean old glue off frame. Apply new glue to frame and gasket (check old gasket when taking off so you will know which side is up). Allow glue to be tacky before putting together. Start gasket at

corners and work to middle. Squeeze on to gasket track if it appears to be too long. Don't wait to the last 3-5 inches to compress what may appear to be excess. It may help to set glass in place, install cover rail in place and install 4-6 screws in place. Just have screws barely touching frame and do not tighten for overnight cure (drying). In the morning, take off frame and glass, checking gasket for good seal. If there is a loose place, put acetone in a spray mist bottle and pull loose area slightly away and mist. The acetone will reactivate glue and reseal back together. Let set an hour or two and reassemble glass and frame.

- Place a small amount of vacuum grease on top edge of gasket and wipe off excess. Replace glass, install cover plate, then start one screw in each corner and add one screw on each side as you go around, adding one screw to a side at a time (only starting each one, do not tighten). When all screws are started, tighten screws to only touch the cover frame. Start in each corner and only snug each screw (1/4 to 1/2 turn) carefully and do not over tighten. In same pattern as starting screws, slightly snug a screw on each side, one at a time, all the way around (follow numerical pattern below) in a diagonal pattern. Continue to do this until all screws are tight, but not overly tight. This procedure is important so glass does not crack with too much tension in one spot. Evenly tighten all screws.

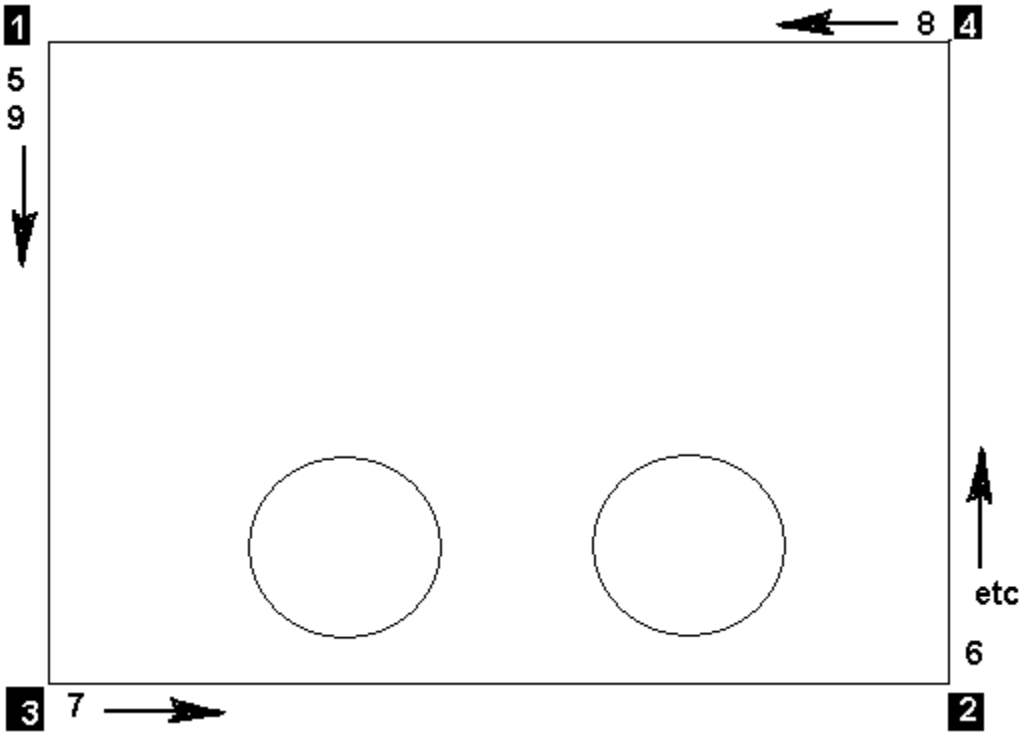

- Glove ports should be removed and retightened in similar procedure. Use a thin film of vacuum grease on port gasket, do not use excess amount. Clean old vacuum grease off port area before assembly.

Solenoid Valve Replacement

1. Decontaminate the glove box interior, if required.

2. Wear appropriate protective equipment as determined by your Safety Officer.

3. Turn the glove box and vacuum pump OFF. Turn the manual valves on the control panel to closed.

4. Remove the rear access panel and the solenoid valve located on the rear of the Auto Pressure Controller. See Figures 3-4 and 4-1.

5. Replace with the new solenoid valve with proper IN or OUT airflow direction. Vacuum is OUT and Inert Gas is IN.

6. Turn the glove box ON and re-certify.

Auto Pressure Controller Circuit Board Replacement

1. Disconnect the power. Refer to Figure 6-2. Check with your Safety Officer for contaminated hoses and seal the ends with tape.
2. Remove the control panel supported by four screws.
3. Remove the circuit board from the control panel and replace with the new circuit board.
4. Replace the pressure hoses as shown in Figure 6-2.
5. Reinstall the control panel with the new circuit board.
6. Calibrate the pressures of both chambers per the Auto Pressure Controller Calibration procedure in Chapter 5.

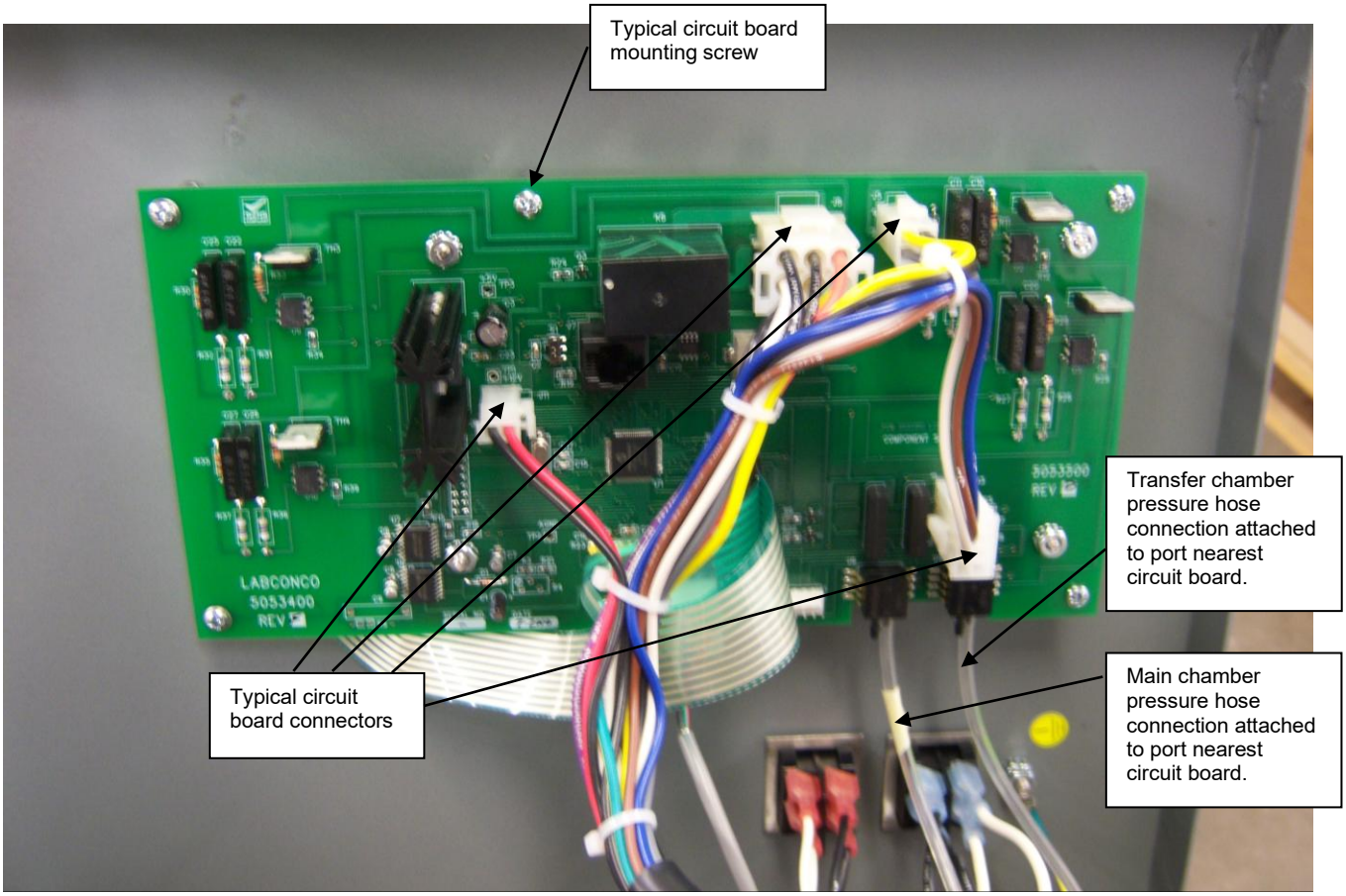

Figure 6-2
Auto Pressure Controller Circuit Board

Chapter 7:
Accessorizing Your Glove Box

There are many ways to accessorize and modify the controlled atmosphere glove box for your individual requirements. These include many different accessories listed in this chapter.

1. **Adjustable Height Base Stands with Work Surface (Part #5235500 w/casters, Part #5235501 w/adjustable feet, Part #5062020 Double Mobile Base Stand)**
   These single stands, 60" x 31", with attached black laminate work surfaces have an adjustable height range from 33" to 40" (838mm-1,016mm) and include a lower shelf for supporting accessory equipment such as the vacuum pump and AtmosPure Re-Gen Gas Purifier. See Appendix B for dimensions of Double Mobile Base Stand for doublewide glove boxes.
2. **Anti-Static Ionizer Fan (Part #5234400, 100/115V or Part #5234401, 230V International)**
   Used for weighing operations. The ionizer fan circulates ionized air inside the glove box to reduce static charge. Ionizer Replacement Points (set of 8 emitter electrodes) are ordered separately (Part #5235100). See Appendix F for additional information.
3. **Balance Vibration Isolator (Part #5234600)**
   Isolates building vibrations and aids with balance weighing. Includes a 20" x 13" x 2 1/4" marble slab with four isolator pads and type 304 stainless steel top cover to protect the porous marble.
4. **Vacuum Aspirator Kit**
   Includes the valve, hose, canister, and vacuum pump for evacuating fluids around the work surface.

Part #	Descriptions
5241800	Vacuum Aspirator Kit, 115V
5241801	Vacuum Aspirator Kit, 230V International

5. **Electrical Power Strips**
   These convenience electrical power strips are available in US and international versions and plug into the interior receptacle of the glove box.

Part #	Descriptions
5211500	US Power Strip 115V, 4 Position, 10A
5210601	UK Power Strip 250V, 6 Position, 10A
5290401	European Power Strip 250V, 4 Position, 10A
5332601	Australian Power Strip 250V, 6 Position, 10A

6. **Electrical 9 Pin Sealed Pass-Through Kit (Part #5075619)**
   Includes sealed 9 pin (D-subminiature with male pins on one side and female pins on the other) connector and cord for data transfer outside the glove box. Typical data transfer includes oxygen/moisture levels or analytical balance measurements to a printer.

7. **Gas Inlet / Vacuum Outlet Tubing Kits and Direct Drive Vacuum Pumps**
   These flexible vinyl tubing kits provide the necessary tubing and fittings to make connections to an inert gas supply tank and a rotary vane vacuum pump. See Figures 3-4 and 3-7.

Part #	Descriptions	Used With
5245100	Complete Gas/Vac Tubing Kit (Required)	Manual Valves, all Protector Glove Boxes
5245200	Complete Gas/Vac Tubing Kit (Accessory)	Auto Pressure Controller, accessory only
1472100	Direct Drive Vacuum Pump, 115V, 50/60Hz	All Glove Boxes
7739400	Direct Drive Vacuum Pump, 230V, 50/60Hz, NEMA 6-15P plug	All Glove Boxes, International Version
7739402	Direct Drive Vacuum Pump, 230V, 50/60Hz with reverse IEC plug	All Glove Boxes, International Version

8. **AtmosPure Re-Gen Gas Purifiers (see catalog #'s below)**
   The AtmosPure Re-Gen Purifier produces an ultrapure inert atmosphere for materials sensitive to moisture and/or oxygen by circulating an inert gas and removing oxygen and moisture inside the box. Compatible with any Protector or Precise Controlled Atmosphere Glove Box, the AtmosPure allows the boxes to meet or exceed ISO 10648-2 test methods. The Purifier has the capacity to remove up to five liters of oxygen (13,500 ppm) and 660 grams of moisture (18 million ppm) at standard temperature and pressure (STP). Depending on the application, glove box liner material and frequency of use, regeneration may be necessary only once every one to three months and completed in only 13 hours. See Figure 1-1 in Chapter 1.

Part #	Descriptions	Electrical Receptacle & Plug Type
5121810	100-115 volts, 50/60 Hz	North America, 100-115 Volts
5121831	208-230 volts, 50/60 Hz	British (UK)
5121835	208-230 volts, 50/60 Hz	Schuko
5121840	208-230 volts, 50/60 Hz	China/Australia
5121845	208-230 volts, 60 Hz	North America, 208-230 Volts

9. **AtmosPure Regeneration Plumbing Kit (Part #5441700)**
   The regeneration plumbing kit includes flexible tubing and fittings to make all the regeneration service supply tubing connections. These are the connections to the 4% hydrogen inert gas mixture, vacuum, and vent.

10. **AtmosPure Circulation Kits (see Part #'s below)**
    The circulation kits include all the plumbing and tubing parts needed to connect the Gas Purifier to the glove box. There are two options for neoprene lined hose or stainless steel tubing.

Part #	Description	Used On
5441800	3/4" I.D. Neoprene lined hose	All Glove Boxes, single width
5441801	3/4" I.D. Neoprene lined hose	All Glove Boxes, double width
5441802	3/4" Rigid Stainless Steel	Protector Glove Boxes, single width
5441803	3/4" Rigid Stainless Steel	Protector Glove Boxes, double width

11. **AtmosPure Roughing Pre-Filter Kit (Part #5441500)**
    Provides two roughing particulate pre-filters and clamp plates to mount inside Protector Glove Boxes only. It is used to filter the inlet and outlet of the glove box as the inert gas is purified. Order individual 5122400 filters separate. Two each required.

12. **AtmosPure P100 Particulate Filter Kit (Part #5441600)**
    Provides two P100 particulate filters and mount housings that are similar to respirator cartridges. P100 filters are 99.97% efficient for all particulates. It is used to filter the inlet and outlet of the glove box as the inert gas is purified. Order replacement filter set 5441601 separate which includes two P100 particulate filters.

13. **Oxygen Monitors**
    Oxygen monitors allow the user to continuously monitor oxygen levels inside the glove box. Monitors are normally placed inside the main chamber to provide the best performance. **Never operate a transfer chamber vacuum evacuation on sensitive oxygen monitors as damage can occur.**

Part #	Descriptions
5244500	0-10,000 ppm Oxygen Monitor (with three ranges of 0-100 ppm, 100-1,000 ppm, and 1,000-10,000 ppm) 100V/115V – 50/60 Hz
5244501	0-10,000 ppm Oxygen Monitor (with three ranges of 0-100 ppm, 100-1,000 ppm, and 1,000-10,000 ppm) 230V – 50/60 Hz – International
5244400	0.1-100% Oxygen Monitor (1,000 ppm lowest) 100V/115V/230V – 50/60 Hz

14. Moisture Monitors/Hygrometers

Moisture monitors or hygrometers allow the user to continuously monitor moisture levels inside the glove box. Moisture monitors are normally placed inside the main chamber to provide the best performance. **Never operate a transfer chamber vacuum evacuation on these sensitive hygrometers as damage can occur.**

Part #	Descriptions
5244900	1-1000 ppm Moisture Monitor/Hygrometer (Factory Set at 1-1,000 ppm, with three settings of 1-10 ppm, 1-100 ppm, and 1-1,000 ppm) 100V/115V – 50/60 Hz
5244901	1-1000 ppm Moisture Monitor/Hygrometer (Factory Set at 1-1,000 ppm, with three settings of 1-10 ppm, 1-100 ppm, and 1-1,000 ppm) 230V – 50/60 Hz – International
5244800	0-100% Hand Held Digital Hygrometer with Temperature Display; measures relative humidity and temperature
5442200	Moisture Meter Probe and Calibration Stand -80 to 0°C dew point range or 0 to 6000 ppm (Display is in dew point only), 100-115V, 50-60 Hz
5442201	Moisture Meter Probe and Calibration Stand -80 to 0°C dew point range or 0 to 6000 ppm (Display is in dew point only), 230V, 50-60 Hz

15. Exterior Monitor Plumbing Kits (Part #'s below)

The exterior monitor plumbing kits provide attachment plumbing to oxygen or moisture monitors outside the glove box. **Note:** The control and accuracy of the oxygen and moisture monitors will be reduced due to the surrounding ambient air rather than inert gas inside the glove box.

Part #	Descriptions	Used With
5442400	Plumbing Kit for Oxygen Monitor (0 to 10,000 ppm)	5244500, 01
5442500	Plumbing Kit for Monitor/Hygrometer with pump (0 to 10,000 ppm)	5244900, 01

16. Automatic Pressure Controller (for use with manual control Protector Glove Boxes only)

The Pressure Controller provides the operator the convenience of automatically regulating pressure and vacuum within the glove box main chamber and transfer chamber. The end user can also automate the evacuation/fill cycles up to 499 cycles for the main chamber and up to 199 cycles on the transfer chamber. The vacuum and pressure can be automatically regulated between -5 to +5 inches of water gauge in the main chamber and between 0 to -29 inches of mercury gauge in the transfer chamber. See illustration below and figures in Chapter 3.

Part #	Electrical Configuration
5238600	100/115 Volts, 50/60 Hz operation
5238601	230 Volts, 50/60 Hz operation
5239100	Benchtop Bracket (required and ordered separate)

17. AtmosPure 6-pin Communication Cable (Part #5442000)
Required for use when AtmosPure and glove box configured with Auto Pressure Controller are sharing one vacuum pump.

18. AtmosPure 9-pin Oxygen/Moisture Monitor Cable (Part #5442100)
Required for use when the AtmosPure is used in AUTO mode. Allows for automatic control of the AtmosPure blower from an accessory Oxygen or Moisture Monitor (sold separately).

19. AtmosPure 3/4" to 3/8" Adapter Kit (See Part #'s below)
Fittings permit 3/4" ID neoprene hose included with 5441800 and 5441801 Kits (sold separately) to attach to separate filtration components listed under item 20 below. Two fittings included with each kit.

Part #	Description
5441900	Elbows
5441901	Reducers

20. Filtration Components for Moisture, Oxygen and Fume Removal
The following components can be used to remove organics, acids, ammonia, oxygen, moisture and other gases as indicated. They are connected to the two auxiliary valves on the main glove box chamber for recirculation of main chamber atmosphere and contaminant removal of air.

Part #	Descriptions
5248200	Vacuum Pump for Circulation, 115V, 60 Hz w/switch
5248201	Vacuum Pump for Circulation, 230V, 50 Hz International
7815301	Canister with Stand for Traps
7815200	Moisture & Solvent Trap Insert; to provide less than 50 ppm moisture (molecular sieve)
7814800	Acid Vapor Trap Insert
7815000	Radioisotope Trap Insert
7995600	Ammonia Trap Insert
5244100	Flowmeter, Visual
5244200	Oxygen and Moisture Removal Column catalysts can be replaced but not regenerated; to provide less than 5 ppm oxygen and less than 50 ppm moisture (refillable)
5244300	Oxygen and Moisture Removal Column Support Stand

Complete Moisture Drying Train; includes pump, column(s), stainless steel tubing and molecular sieve to achieve less than 5ppm moisture only.

Part #	Descriptions
5061300	115V, 60 Hz – one column
5061301	115V, 60 Hz – two columns, one in use while other regenerates
5061302	230V, 50 Hz – one column
5061303	230V, 50 Hz – two columns, one in use while other regenerates
5117000	Optional Second Column for 5061300 or 5061302
7837300	Molecular Sieve Replacement Media for two refills

21. Drying Train Tubing Kit

Includes the (FEP) tubing and connections required for connecting typical drying train components such as moisture, oxygen, and other gases. Fluorinated ethylene-propylene (FEP) tubing has very low moisture absorption.

Part #	Descriptions
5242500	Drying Train Tubing Kit; moisture, solvents and radioisotopes
5242501	Drying Train Tubing Kit; oxygen and moisture only

22. Gas and Vacuum 0.2 Micron Filter (Part #5240100)

Used for removal of particulates in a drying train, vacuum pump exhaust or inert gas line. 0.25"-0.38" ID tube connection with additional fittings for attachment to 0.50" ID hose.

23. External Glove Port Covers (Part #5242200)

Cap and clamp attaches to the glove ports to eliminate glove inflation during purging and filling operations and reduce the cycle time of the purging/filling process. Sold as a set of two.

24. Interior Glove Port Cover (Part #5060400)

Quickly seals glove box should sudden leak occur due to glove damage. Stainless steel with molded rubber gasket and spring-loaded latches with adjustable closure knob.

25. Interior Shelves (Part #5061600)

Provide shelf space across back wall of glove box interior. Three stainless steel storage shelves are attached to epoxy-coated steel upright supports. Shelves have adjustable height and measure 30" wide x 6" deep. Installation hardware and instructions included.

26. Gloves (see *Appendix A: Replacement Part* numbers for other glove sizes and material types)

Neoprene gloves are the most resistant to abrasion and tearing. Butyl gloves provide higher impermeability and improved dexterity. Chlorosulfonated Polyethylene (CSM) gloves provide superior resistance to ozone and oxidizing chemicals with a natural soft feel for greater worker comfort.

27. Left Side Sealed Electrical Plug Kit (see Part #'s below)

Part #	Descriptions
5075622	115V single outlet
5075623	230V IEC single outlet

28. Vacuum Line HEPA Filter and Housing

Part #	Descriptions
5441400	Housing for HEPA Filter and connections
5441401	HEPA Filter, Round 99.99% efficient on 0.3 micron
5441403	Pressure Relief Bubbler Room Exhaust Kit for HEPA filtration

29. Left Side Door Option (Factory Prepared Only)

Any stainless steel glove box can be factory prepared with a large sealed left side door for use in conveniently loading large equipment tested to meet ISO 10648-2 Class 2 atmosphere leak specification. With the left side door option, the need to remove the front laminated safety glass frame is eliminated. The left side door has an opening of 16.5" (419 mm) wide x 23.2" (589 mm) high. Contact Labconco at time of order for the left side door option.

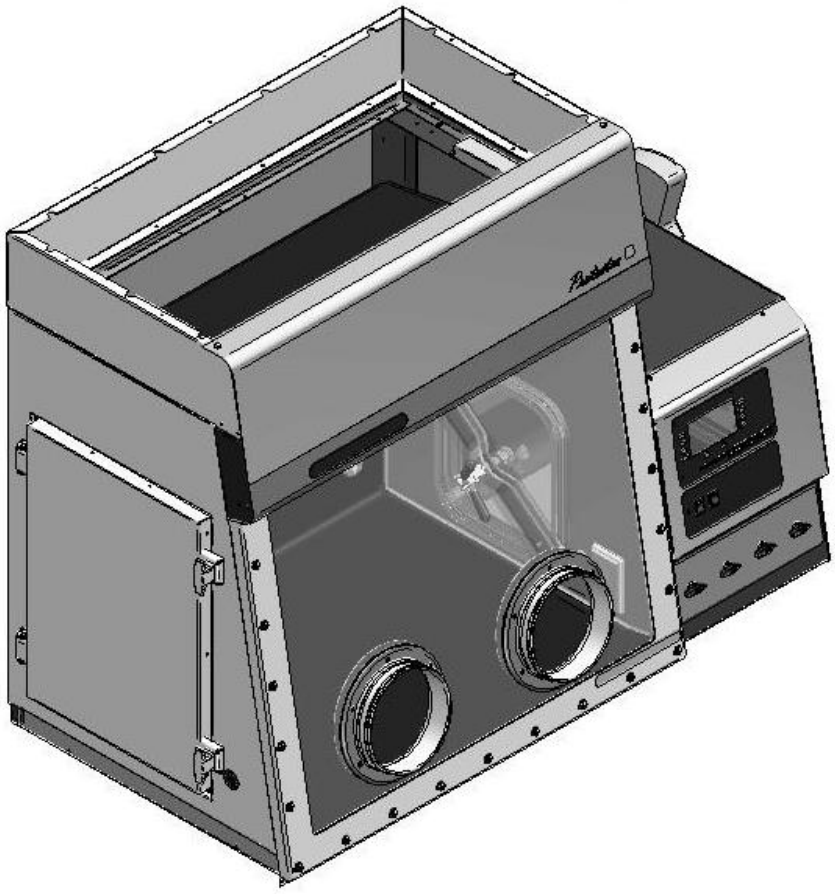

Figure 7-1
Left Side Door Option

30. Filtered Dry Glove Box Humidity Removal Kit (Part #5444500)

The Filtered Dry Glove Box Humidity Kit provides a means to reduce humidity/moisture to 5-10% in 10-20 minutes and reduce oxygen to 2-10% in 7-20 minutes. Humidity/moisture and oxygen can rapidly be reduced by filling and purging the glove box with nitrogen or argon. Best results occur with the blower setting set to OFF as the inert gas passes through to exhaust filter and out through the blower. See Labconco 5444400 instruction sheet for performance charts on moisture and oxygen removal levels.

Chapter 8: Troubleshooting

Refer to the following table if your glove box fails to operate properly. If the suggested corrective actions do not solve your problem, contact Labconco for additional assistance.

PROBLEM	CAUSE	CORRECTIVE ACTION
Lights will not operate.	Unit not plugged into outlet.	Plug unit into appropriate electrical service.
	Circuit breaker(s) tripped.	Reset or replace circuit breaker.
	Lamp not installed properly.	Inspect lamp installation.
	Lamp wiring disconnected.	Inspect lamp wiring.
	Defective lamp.	Replace lamp.
	Light switch is defective.	Replace light switch.
	Defective electronic ballast.	Replace ballast.
No power to electrical receptacle.	Unit not plugged in.	Plug unit into electrical service.
	Circuit breaker(s) tripped.	Reset or replace circuit breaker.
	Receptacle switch is defective.	Replace receptacle switch.
	Receptacle is defective.	Replace receptacle.
Auto Pressure Controller Solenoid Valves will not operate.	Plumbing is installed incorrectly.	Check plumbing and insure VAC is “out” to vacuum pump and GAS is “in” from inert gas supply.
	Solenoid Valve is defective.	Replace solenoid valve.
Auto Pressure Controller will not operate.	Unit not plugged into outlet. Circuit breaker(s) tripped.	Plug unit into appropriate electrical service. Reset or replace circuit breaker.
	LCD Display is defective.	Replace circuit board or power supply circuit board.

Appendix A: Replacement Parts

The components that are available for your glove box are listed. The parts shown are the most commonly requested. If other parts are required, please contact Product Service.

Item	Qty.	Part Number	Description
			Window Components
1A	1	5066600	Window, Glass Viewing
1B	1	5066700	Window, Polycarbonate Viewing
2A	1	5067200	Window, Gasket, Fiberglass Models
2B	1	5098400	Window, Gasket, Stainless Steel Models
2C	0.01 quart	1576800	Adhesive, Plyobond, Fiberglass Models
2D	0.01 quart	1594800	Adhesive, 3M #4799, Stainless Steel Models
3A	1 pair	1640600	9 ¾ size Neoprene Glove (standard)
3B	1 pair	1640601	9 ¾ size Butyl Gloves
3C	1 pair	1640602	9 ¾ size Chlorosulfonated Polyethylene (CSM) Gloves
3D	1 pair	1640500	8 ½ size Neoprene Gloves
3E	1 pair	1640501	8 ½ size Butyl Gloves
3F	1 pair	1640502	8 ½ size Chlorosulfonated Polyethylene (CSM) Gloves
3G	2 each	1640000	O-rings
3H	2 each	1965600	Clamp – O-Ring Gloves
			Transfer Chamber Components
4A	1	5410800	Complete Door Assy., Fiberglass Inner
4B	1	5098500	Complete Door Assy., Stainless Steel Inner
5A	1	5422700	Inner Acrylic Door Only, Fiberglass Models Only
5B	1	5064200	Door Gasket, Inner and Outer, Fiberglass Models Only
5C	0.1 tube	1594800	Gasket Sealant, Fiberglass Only
6	1	5410000	Outer Acrylic Door Only, Fiberglass Models Only
7A	1	5098300	Door Gasket, Inner and Outer, Stainless Models Only
7B	0.1 tube	1594800	Gasket Sealant, Stainless Steel Models Only, 3M #4799
8	1	5414000	Complete Door Assy., Fiberglass Outer
9	1	5098600	Complete Door Assy., Stainless Steel Outer
10A	1	5068601	Clamp, Door Plated Steel, Fiberglass Models
10B	1	5068600	Clamp, Door Stainless Steel Models
11	1	5064600	Door Adjustment Screw
12	1	5410000	Outer Acrylic Door Only
			Plumbing Components
13	1	5411500	Ball Valve, Control Panel
14A	1	5417600	Solenoid Valve, Pressure Controller Only, 115V
14B	1	5417601	Solenoid Valve, Pressure Controller Only, 230V
15A	1	1408200	Nut, Compression
15B	1	1408300	Ferrule (Large)
15C	1	1408400	Ferrule (Small)
16	1 liter bottle	1988000	Oil, Bubbler
17	1	1410100	Union, Straight 3/8 T
18	1	5427600	Bubbler with Liquid Level Gauge
19	1	5425100	Elbow, 3/4
20	1	5425200	Plug, 3/4
21	1	1365200	Pressure Gauge, ±5" H2O, Basic Manual Units Only
22	1	1365300	Vacuum Gauge, 0-30” Hg, Basic Manual Units Only
23A	1	1409900	Insert, Tube (used inside tubing to gauges)
23B	2	5426600	Tubing, 3/8 O.D. x 3/16 I.D. cut to length
23C	2	6964400	Fitting, Barbed Tube
23D	4 ft.	1554304	Tubing, Tygon 5/32 O.D. x 3/32 I.D.

Item	Qty.	Part Number	Description
			Electrical Components
24A	1	1307000	Switch, 2 Position
24B	1	3823600	Retainer, Switch
25	1	5240000	Membrane Switch Decal, Auto Pressure Controller Only
26	1	5053400	Control Board, Auto Pressure Controller Only
27A	1	5053700	Power Supply 12VDC/5.2A, Auto Pressure Controller Before 2022
27B	1	5053702	Power Supply 12VDV/5.24A, Auto Pressure Controller
27C	1	5053701	Adapter Plate, GB Power Supply – Used with 5053702
28	1	5243600	Foot Switch, Auto Pressure Controller Only
29A	1	1327211	Circuit Breaker, 12A
29B	1	1327203	Circuit Breaker, 6A
29C	1	1327201	Circuit Breaker, 10A
29D	1	1327200	Circuit Breaker, 3A
29E	1	1327205	Circuit Breaker, 2A
30	1	1333800	Inlet Power, IEC Connector
31A	1	7907802	Outlet Assy., VAC Pump 115V
31B	1	1333900	Receptacle Outlet IEC, VAC Pump 230V
32A	1	1230700	Duplex Receptacle, Interior 100-115V, N. America
32B	1	1295200	Receptacle, UK 230V
32C	1	1295300	Receptacle, Schuko 230V
32D	1	1295100	Receptacle, China/Australia 230V
32E	1	1283900	Duplex Receptacle, Interior 230V, N. America
32F	1	5233400	Gray Duplex Wallplate, 100-115V or 23V, N. America
32G	1	1294900	Wallplate, UK or Schuko
32H	1	1295000	Cover, China/Australia
33A	1	1305800	Power Cord 100-115V, N. America
33B	1	1332600	Power Cord 230V, UK
33C	1	1336100	Power Cord 230V, Schuko
33D	1	1332700	Power Cord 230V, China/Australia
33E	1	1338000	Power Cord 230V, N. America
34	2	9721901	Lamp, Fluorescent F25T8-SP41, 25 watt
35	2	3836800	Lampholder, Push On
36	1	3838100	Ballast Assembly, Fluorescent
37A	1	5423000	Wiring Diagram, G.B. 115V
37B	1	5423100	Wiring Diagram, G.B. 230V
38A	1	5425400	Wiring Diagram, Auto Pressure 115V
38B	1	5425401	Wiring Diagram, Auto Pressure 230V
39A	1	5437400	Wiring Diagram, Doublewide 115V
39B	1	5437401	Wiring Diagram, Doublewide 230V
			Miscellaneous
40A	1	5413900	Panel Access, Left
40B	8	1909217	Acorn Nut, #10-24
41	1	1934601	Heyco Bushing, Pass-Through
42A	1	5413601	Front Panel, Painted Fiberglass Models
42B	1	5413600	Front Panel, Stainless Steel, Stainless Steel Models
42C	2	1889308	Screw, #10-24 x 0.50 Phillips
43A	1	5252700	Combination Isolation Valve, Interior
43B	.01	1584100	Spray, Dry Silicone Lubricant
44	1	5427700	Union, Straight 3/4T (used to exhaust bubbler)

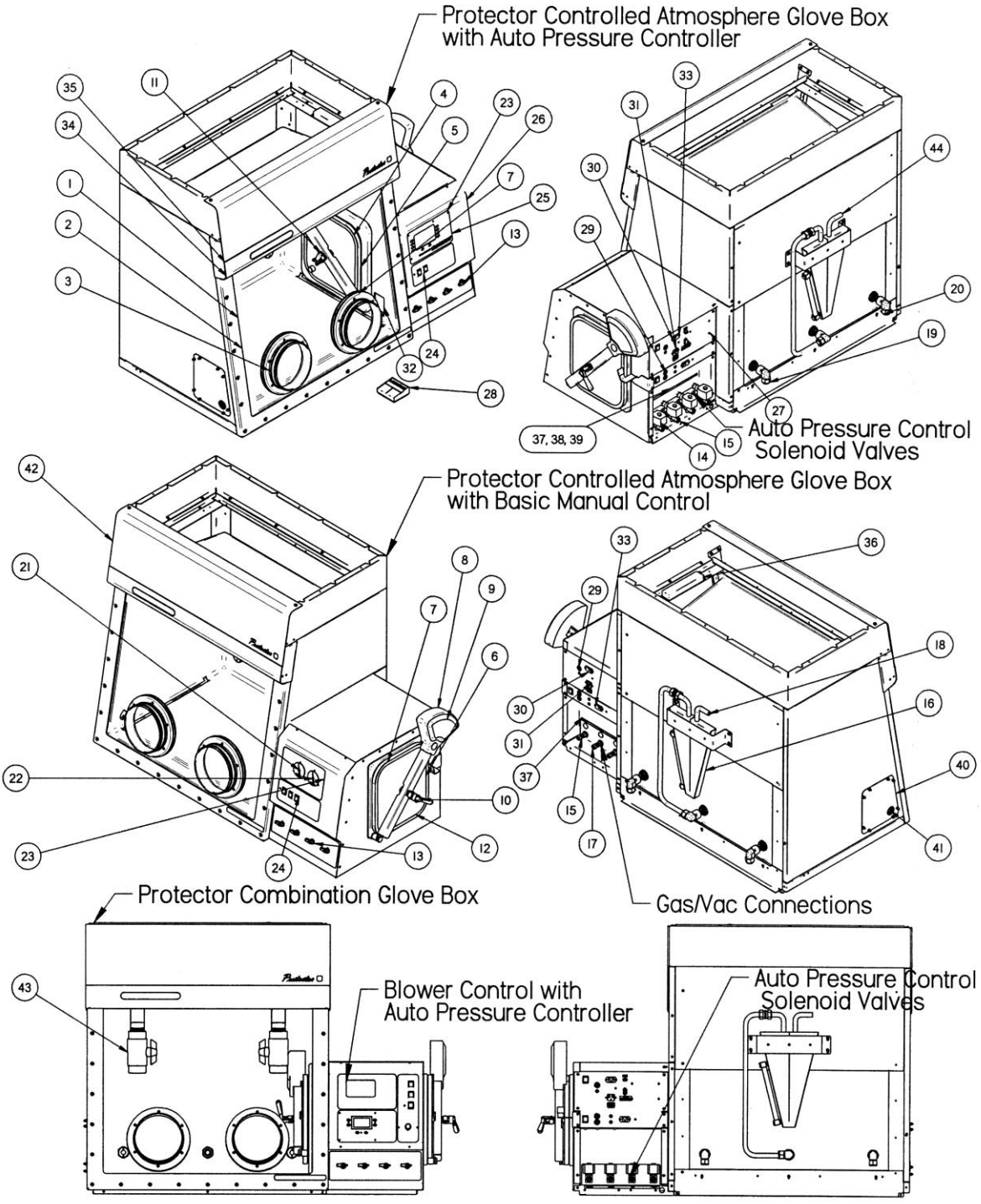

Figure A-1
Replacement Parts

Appendix B: Dimensions

See the following for all dimensions of the glove boxes. For conversion, 1" equals 25.4mm. All dimensions in inches.

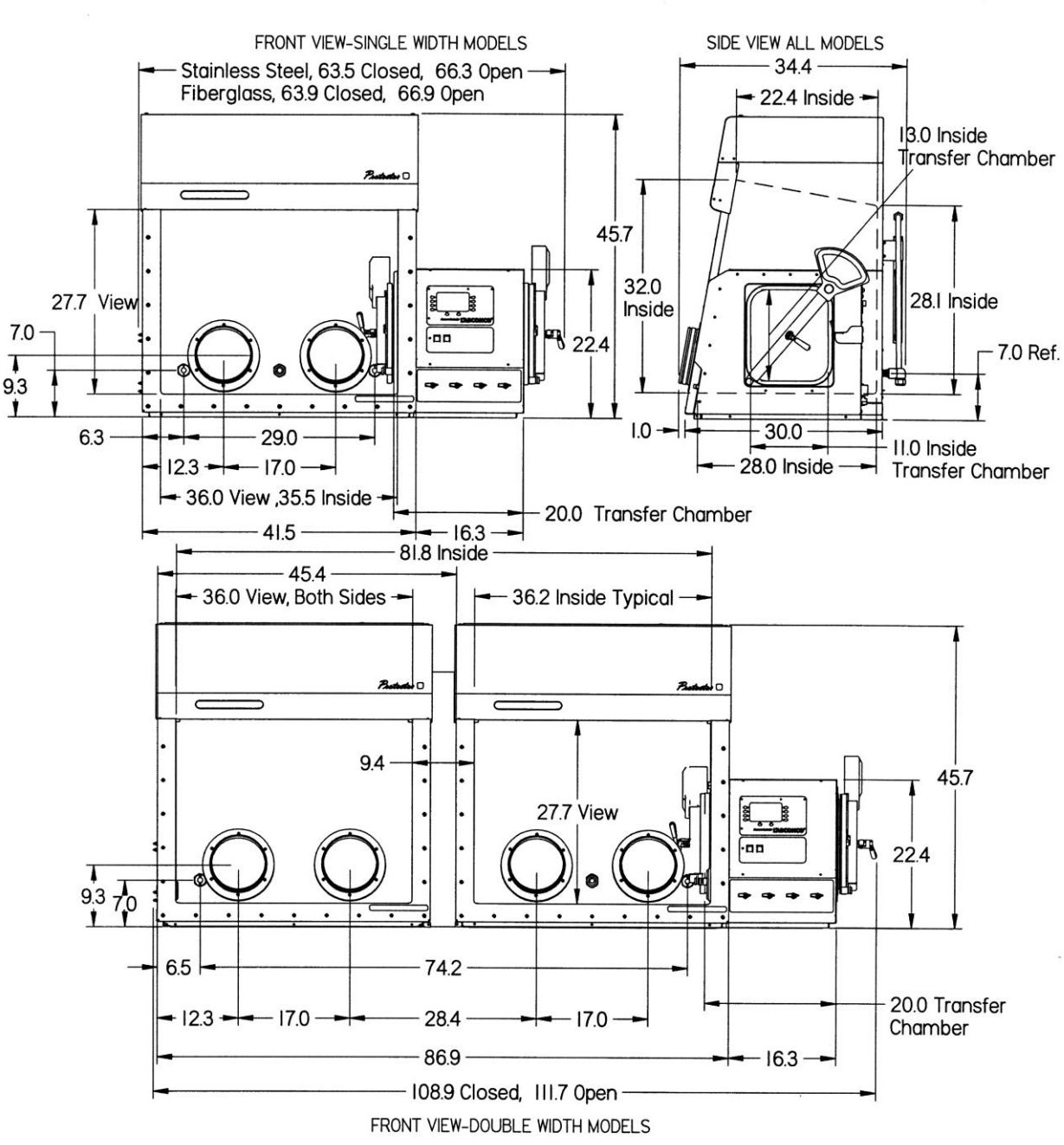

Appendix C: Specifications

This Appendix contains technical information about all the glove boxes including electrical specifications and environmental operating conditions.

- All models: 12 Amps, 100-115V or 230V, 50/60 Hz
- Vacuum pump exterior receptacle rated at 12 Amps, 100-115V, 50/60 Hz or 6 Amps, 230V 50/60 Hz.
- Single width units require two line cords and double width units require three line cords.

Environmental Conditions

- Indoor use only.
- Maximum altitude: 6562 feet (2000 meters).
- Ambient temperature range: 41° to 120°F (5° to 49°C).
- Maximum relative humidity: 80% for temperatures up to 88°F (31°C), decreasing linearly to 50% relative humidity at 104°F (40°C).
- Main supply voltage fluctuations not to exceed ±10% of the nominal voltage.
- Transient over-voltages according to Installation Categories II (Over-voltage Categories per IEC 1010). Temporary voltage spikes on the AC input line that may be as high as 1500V for 115V models and 2500V for 230V models are allowed.
- Used in an environment of Pollution degrees 2 (i.e., where normally only non-conductive atmospheres are present). Occasionally, however, a temporary conductivity caused by condensation must be expected, in accordance with IEC 664.

Appendix D:
Controlled Atmosphere Oxygen & Moisture Removal Rates

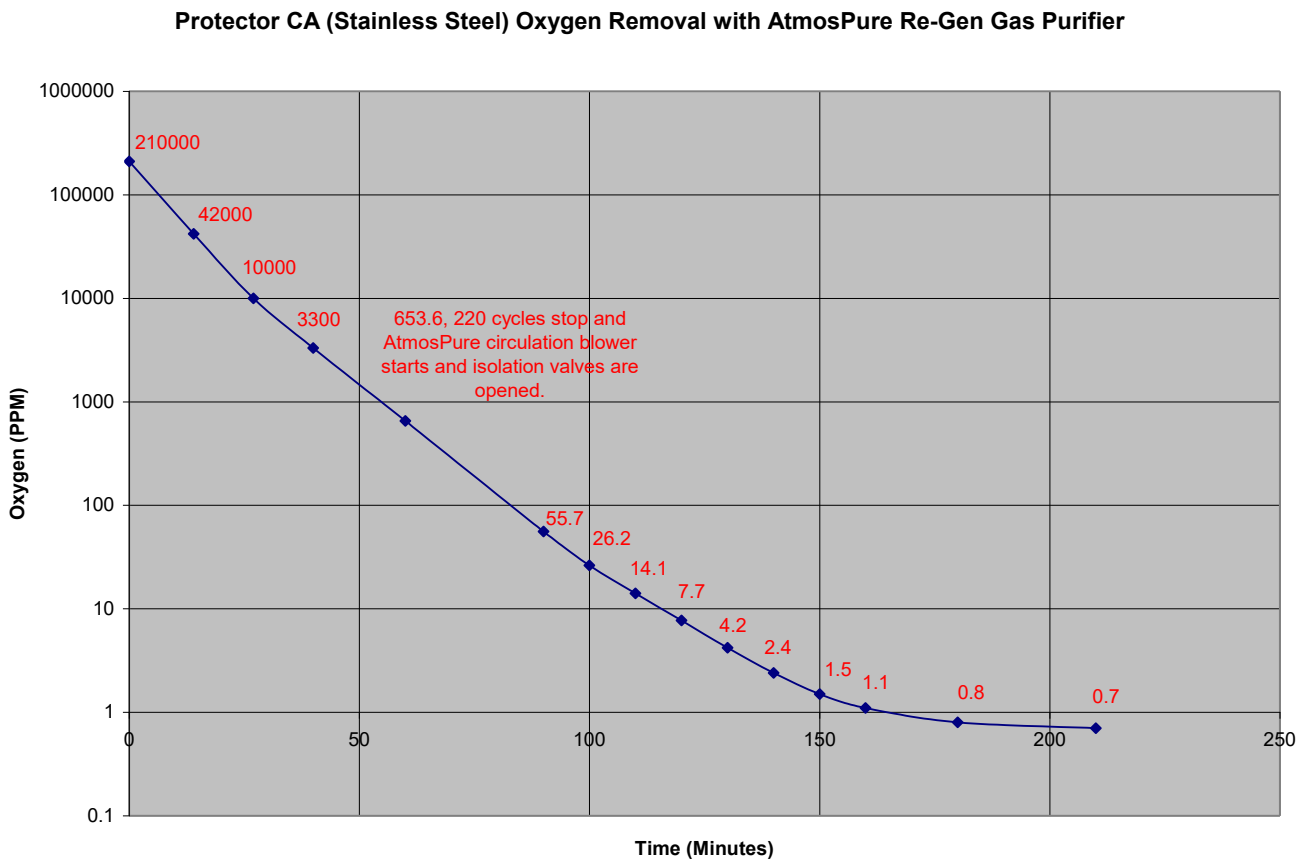

This chart shows oxygen level decrease from 210,000 ppm at atmospheric conditions to 0.7 ppm after 210 minutes. Two separate calibrated oxygen monitors confirmed results.*

* Results were attained at Labconco Corporation under controlled conditions for a single-wide stainless glove box. Actual results may vary.

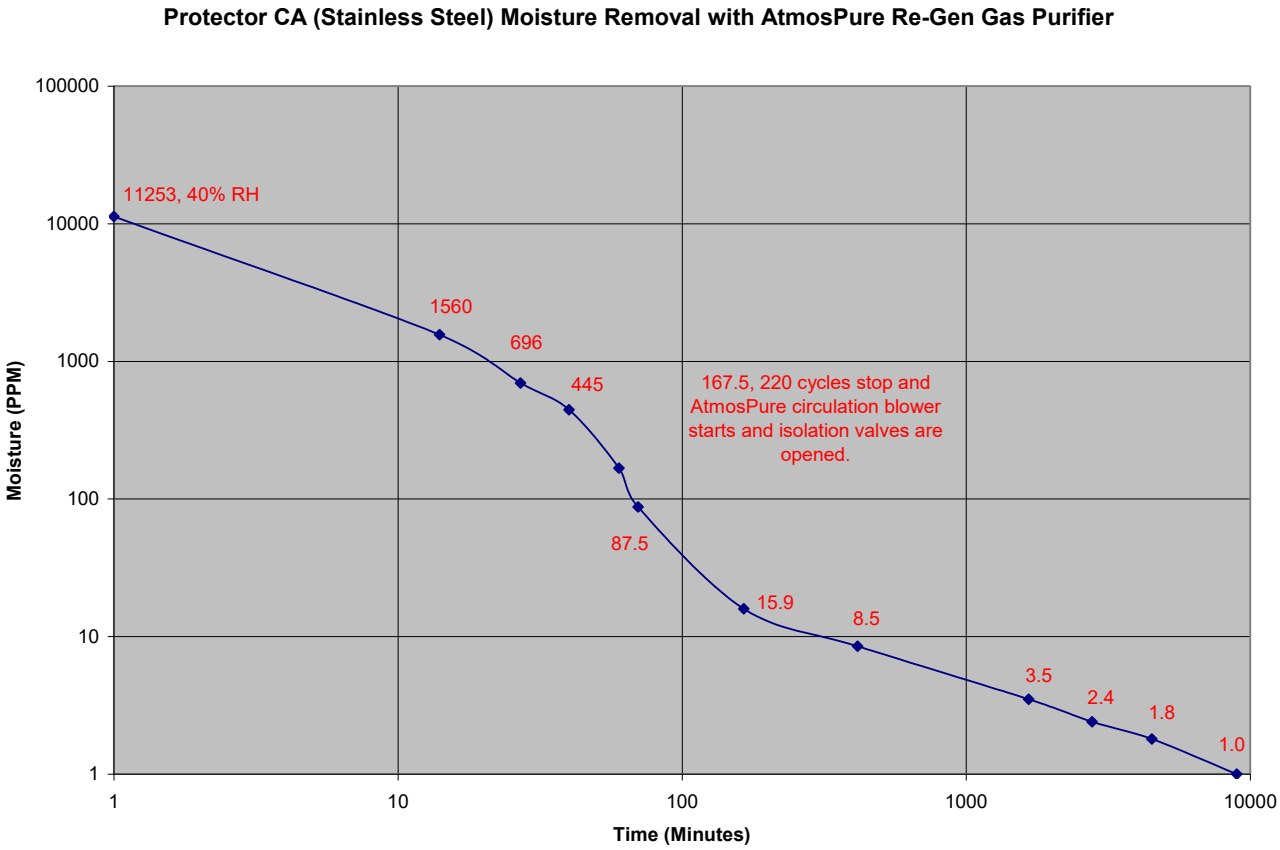

This chart shows moisture level decrease from 11,253 ppm (40% relative humidity) to 1.0 ppm after 8965 minutes. Two separate calibrated moisture monitors confirmed results.*

* Results were attained at Labconco Corporation under controlled conditions for a single-wide stainless glove box. Actual results may vary.

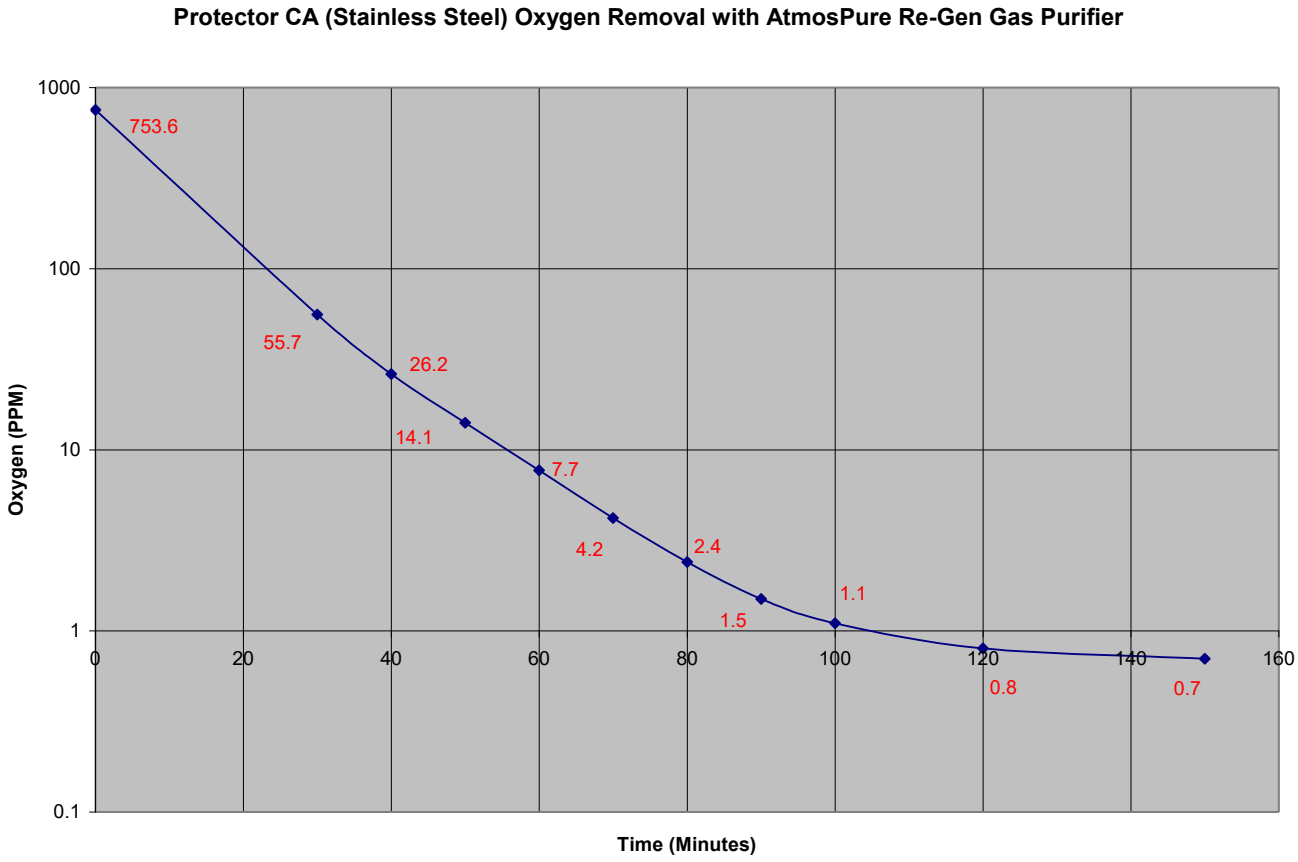

This chart shows oxygen level decrease from 753.6 ppm to 0.7 ppm after 150 minutes. Two separate calibrated oxygen monitors confirmed results.*

* Results were attained at Labconco Corporation under controlled conditions for a single-wide stainless glove box. Actual results may vary.

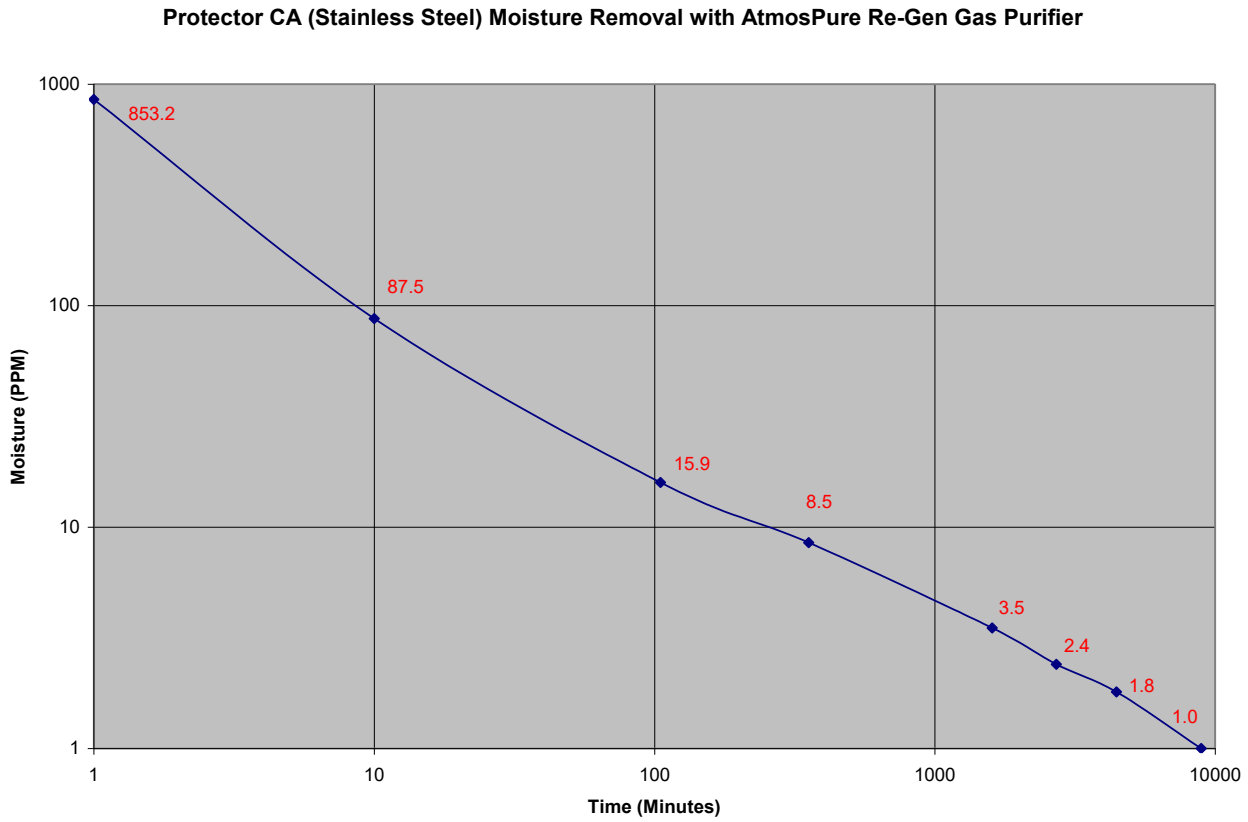

This chart shows moisture level decrease from 853.2 ppm to 1.0 ppm after 8905 minutes. Two separate calibrated moisture monitors confirmed results.*

* Results were attained at Labconco Corporation under controlled conditions for a single-wide stainless glove box. Actual results may vary.

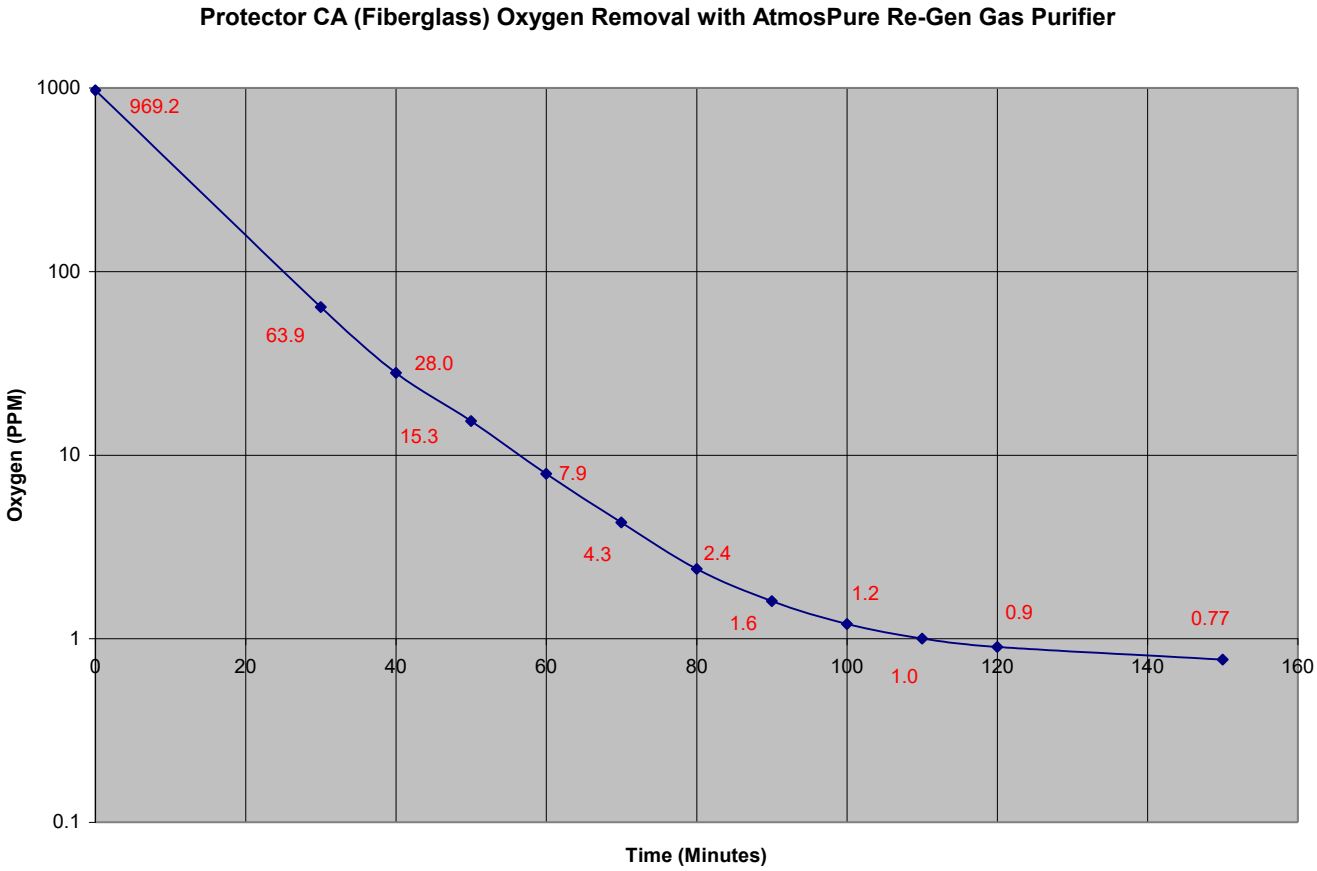

This chart shows oxygen level decrease from 969.2 ppm to 0.77 ppm after 150 minutes. Two separate calibrated oxygen monitors confirmed results.*

* Results were attained at Labconco Corporation under controlled conditions. Actual results may vary.

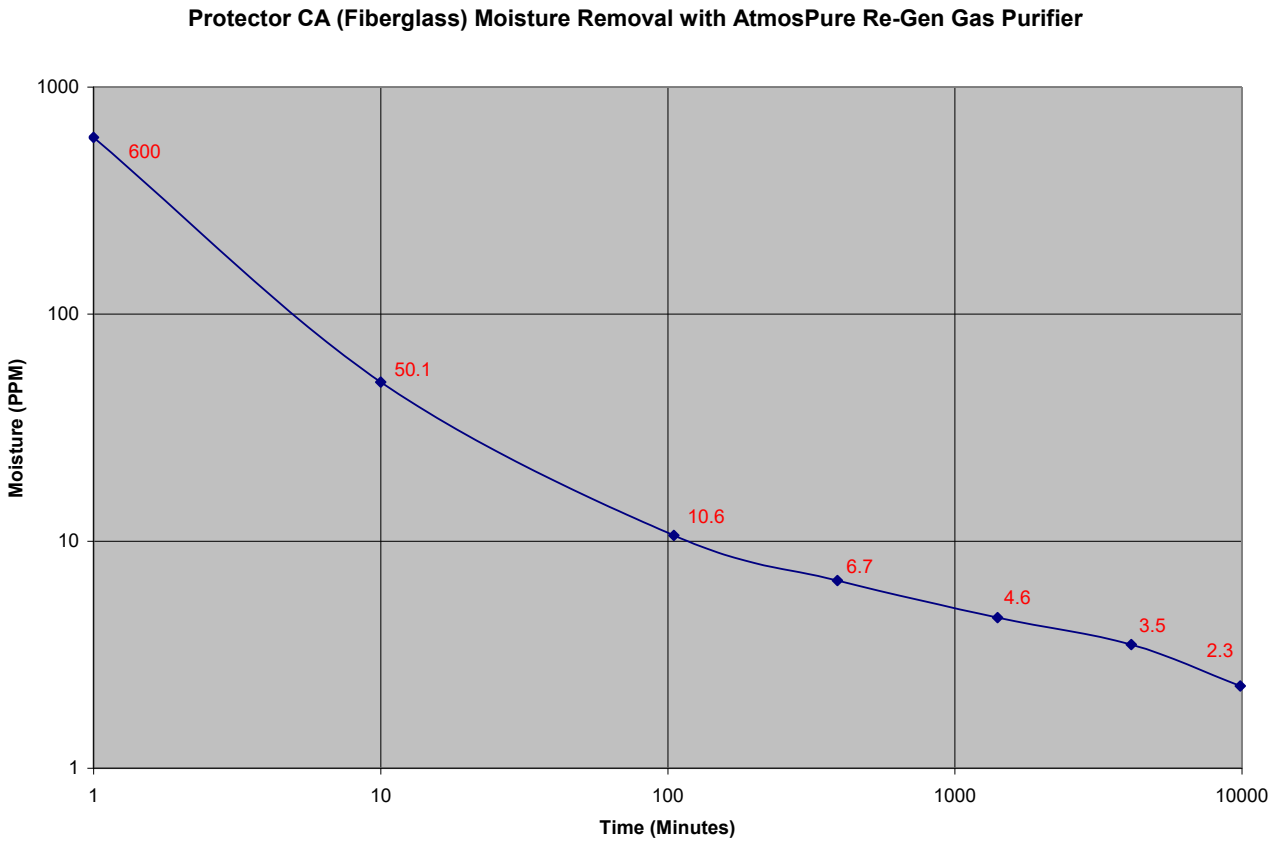

This chart shows moisture level decrease from 600 ppm to 2.3 ppm after 9875 minutes. Two separate calibrated moisture monitors confirmed results.*

* Results were attained at Labconco Corporation under controlled conditions. Actual results may vary.

Appendix E: Approximate Life Span for Accessory AtmosPure Re-Gen Gas Purifier

	Protector (FRP) Fiberglass	Single-Wide Protector Stainless Steel	Double-Wide Protector Stainless Steel
Attainable Oxygen Purity (ppm)	0.4 ppm	0.2 ppm	<5 ppm
Usable Oxygen Permeation	0.16 ppm/min	0.14 ppm/min	<1.00 ppm/min
Approximate Life (ppm)	13,500 ppm	13,500 ppm	13,500 ppm
Approximate Life (days)	58	67	>9

Appendix F:
Ionizer Fan Performance Criteria

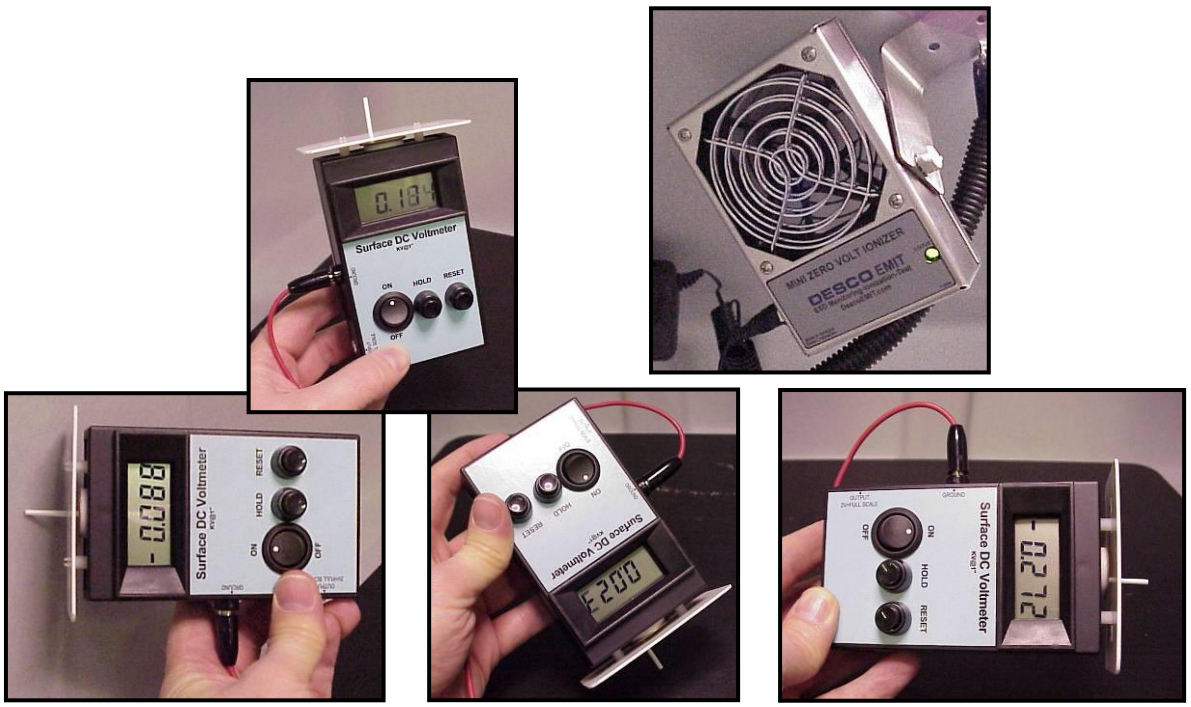

Static Electricity Test

The tests were performed by monitoring the level of static electricity found on the work surface and interior surfaces within the glove box. Static electricity levels were measured with an AlphaLab Surface DC Voltmeter http://scientificmeter.com/surface_dc.htm.
A DESCO Emit Mini Zero Volt Ionizer http://www.descoemit.com/ViewProduct.aspx?pid=50661&h=1323 was installed in the glove box. The DESCO ionizer is a dual steady state DC auto balancing bench top ionizer. The ionizer helps to neutralize static electricity on surrounding surfaces. The time required by the ionizer to neutralize static electricity will be the shortest when objects are within 12" to 36" directly in front of the ionizer. The time for neutralization increases as the distance from the ionizer increases. The time required for sufficient electrostatic decay will also vary depending upon user application, moisture levels within the supply air and the level of cleanliness within the glove box interior.

	Test Point Locations and Voltage Levels						
	Metal Housing Inlet HEPA	Metal Housing Exhaust HEPA	Metal Transfer Chamber Handle	Back Interior Surface	Left FRP Interior Surface	Right FRP Interior Surface	Center FRP Work Surface
Electrostatic with Glove Box Blower & Ionizer Fan OFF	+ 420	+ 220	+ 734	+ 375	+ 106	+ 151	+ 153
100 CFM Blower & Ionizer Fan ON After 1 Hour	+ 96	+ 114	+ 290	+ 93	+ 45	+ 52	+ 35
100 CFM Blower & Ionizer Fan ON After 2 Hours	+ 28	+ 58	+ 51	- 52	- 15	- 20	- 22

Static Electricity Test Results (VOLTS) on the Glove Box (Neutralization is best between +/-100V)

The mini zero volt ionizer's neutralization time will be shortest when objects are approximately 12" to 36" directly in front of the ionizer and will increase as the distance from the ionizer increases. Set the fan speed switch on the side of the ionizer to the LOW or HIGH position. Higher airflow will result in faster neutralization rates. Position the ionizer so that the maximum airflow is directed at the items or area to be neutralized. The LED will turn on during power up and remain GREEN during normal operation. The ionizer has a grounding jack and must have a good earth ground to maintain proper balance. Always plug the AC power adaptor into the ionizer and then into the appropriate AC power source. The ionizer has no On/Off switch so it should be running as soon as it is plugged in. The ionizer is designed to run off of 24VDC ±10% 300mA.

The balance adjustment for the ionizer can be accomplished by inserting a small screwdriver or trimmer adjustment tool into the balance adjustment hole located on the side of the unit. To increase the output in a positive direction, turn the potentiometer in a clockwise direction. Conversely, to increase the output in a negative direction, turn the potentiometer in a counter clockwise direction. It is recommended that you use a surface DC voltmeter when adjusting the balance of the ionizer.

Under normal conditions, the ionizer will attract dirt and dust (especially on the emitter electrodes). To maintain optimum neutralization efficiency and operation, cleaning with isopropyl alcohol should be performed on a regular basis. If the performance of the ionizer degrades because of dirty or corroded points, the LED on the front of the unit will turn YELLOW; the audible alarm will sound continuously. Under this condition, the unit is not able to maintain balanced ionization. The input power cord must be disconnected before the unit is opened for maintenance. The emitter electrodes should be cleaned using the alcohol cleaners included or a swab wet with isopropyl alcohol. Unscrew the 4 screws on the back of the unit and then remove the screen. After cleaning the emitter electrodes, reinstall the screen and 4 screws. The emitter electrodes should not require replacement during the life of the unit with normal handling. Verify the balance of the ionizer with a surface DC voltmeter after cleaning.

Appendix G:
Helium Leak Test Procedure

Purpose

The purpose of this test is to assure that all gasketed joints and seams of the enclosure are helium leak tight.

Test Setup

1. Connect one of the valves to a vacuum pump.
2. Connect the other valve to a helium supply tank regulated between 10 and 15 PSI.
3. Install two neoprene gloves onto the glove ports using standard O-rings and clamps.

Test Procedure

1. Be sure the inner transfer chamber door is latched closed and the outer door is open.
2. Open the helium inlet test valve and allow box to pressurize to +5 H_2O gauge than close valve. Then with the vacuum pump running, open the test outlet valve and allow the box to be evacuated to -5" H_2O gauge then close valve. Repeat this purge/fill for a total of three cycles then close both valves.
3. While Glove Box pressure is held at +5.0" minimum, sniff all Glove Box joints, seals and seams of the Glove Box shell using a test probe connected to a helium mass spectrometer (Inficon model or equal calibrated at 1.7×10^{-7} STD. CC/SEC). Also sniff the inner transfer door seal by inserting test probe through the outer transfer chamber door. Any detectable leaks greater than 1×10^{-6} STD.CC/SEC is cause for rejection.
4. Close and latch the outer door and open the inner door. Adjust Glove Box pressure to +5.0".
5. Sniff the outer transfer door seal and make sure there are no leaks greater than rate specified in Step 3 above.

Other Equipment

1. For a less critical helium leak measurement using a lower cost leak detector, Labconco recommends using Restek (www.restek.com) or other instrumentation available from a laboratory supply dealer.

Appendix H: Conversions

Pressure Conversions

To From	mmHg	in.Hg	in.H_2O	ft.H_2O	atm	lb/in.^{2}	Kg/cm^2	kPa	bar
mmHg	1	.03937	.5353	.04461	.00132	.01934	.00136	.1333	.0013
in.Hg	25.40	1	13.60	1.133	.03342	.4912	.03453	3.387	.0339
in.H_2O	1.868	.07355	1	.08333	.00246	.03612	.00254	.2490	.0025
ft.H2O	22.42	.8826	12	1	.02950	.4334	.03048	2.988	.0299
atm	760	29.92	406.8	33.90	1	14.70	1.033	101.3	1.013
lb/in.^{2}	51.71	2.036	27.69	2.307	.06805	1	.07031	6.895	.0689
Kg/cm^2	735.6	28.96	393.7	32.81	.9678	14.22	1	98.05	.981
kPa	7.500	.2953	4.016	.3347	.00987	.1451	.0102	1	.01
bar	750	29.53	401.6	33.47	.987	14.51	1.02	100	1

Flow Rate Conversions

To From	lit/sec	gal/min	ft^3/sec	ft^3/min	bbl/hr	bbl/day
lit/sec	1	15.85	0.03532	2.119	22.66	543.8
gal/min	0.06309	1	0.00223	0.1337	1.429	34.30
ft^3/sec	28.32	448.8	1	60	641.1	1.54×10^4
ft^3/min	0.4719	7.481	0.01667	1	10.69	256.5
bbl/hr	0.04415	0.6997	0.00156	0.09359	1	24
bbl/day	0.00184	0.02917	6.50×10^5	0.00390	0.04167	1

Appendix I: References

Many excellent reference texts and booklets are currently available. The following is a brief listing:

Pharmaceutical Isolators, A Guide to their application design and control. Pharmaceutical Press 2004, Editors: Midcalf, Phillips, Neiger, and Coles.

Isolation Technology, A Practical Guide, 2004 CRC Press, 2nd Edition, www.crcpress.com

International Standard ISO 10648-2 Containment Enclosures
- Classification according to leak tightness and associated checking methods.

NIOSH Pocket Guide to Chemical Hazards
U.S. Dept of Health and Human Resources
Centers for Disease Control and Prevention
National Institute for Occupational Safety and Health

The Manipulation of Air Sensitive Compounds, by D.R. Shriver and M.A. Drezdzon; published by John Wiley and Sons.

Appendix J:
Replacement Gloves Installation Procedure

Installation of replacement gloves to the Protector Controlled Atmosphere Glove Box while maintaining a controlled atmosphere.

Installation Procedure

1. Before installing the replacement gloves, use the Automatic Pressure Controller or manually create a neutral pressure inside the glove box with the gloves currently attached, fully inside the glove box. Approx. 0 in/H_20.

2. Loosen and remove the stainless-steel band clamp and O-ring from one glove. Set the clamp and O-ring to the side. Only change one glove at a time since the opposite glove will be used during the procedure.

3. Now that the clamp and O-ring are removed, carefully and slowly pull the beaded glove cuff from the groove nearest to the window to the outer groove.



4. Install the new glove over the existing glove by stretching the beaded glove cuff onto the glove port groove nearest to the window.

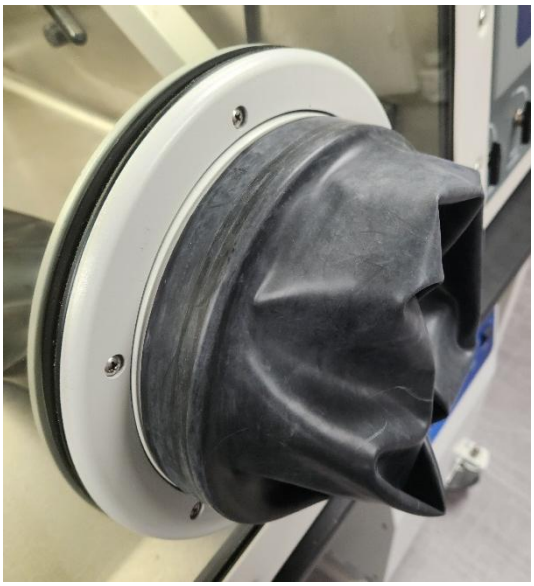

5. Temporarily install the O-ring and stainless-steel clamp onto the groove nearest to the window to secure the new glove in place.

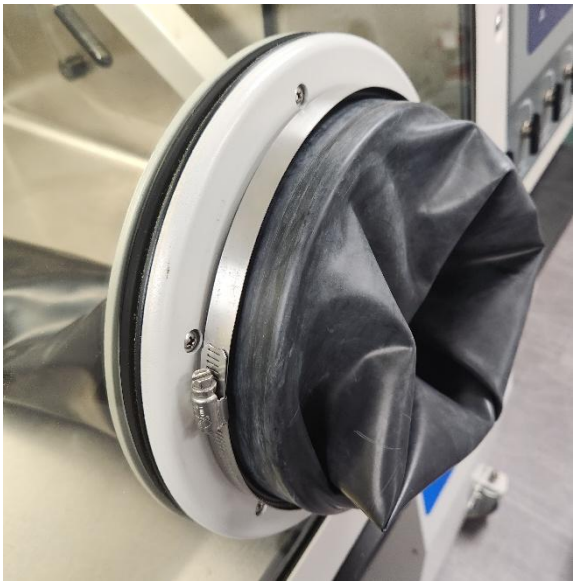

6. From the outside of the glove box, carefully loosen the old glove's beaded cuff from the outer groove and start pushing it inside the glove box through the new glove's material.

7. Once the old glove's cuff is loose, use the opposite glove to slowly pull the old glove into the glove box and set to the side.

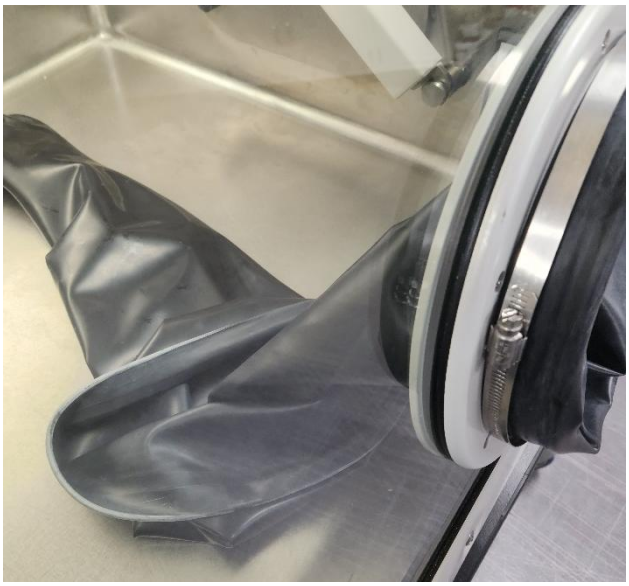

8. Now that the old glove is removed, move the O-ring to the outer groove and install the metal clamp over it.



9. Once one glove has been replaced, repeat for the opposite glove if needed.