4 Foot Purifier®
Clean Bench

INSTRUCTION MANUAL

MODEL 36125

Product designs are subject to change without notice
© 1996 Labconco Corporation
Form 37049 - Rev C/ ECO 9048
Printed in U.S.A.

TABLE OF CONTENTS

Introduction

Components Shipped	3
General Description	4
Performance	5
Component Identification	6-7

Installation

Preparation	8
Location	8
Installing the Clean Bench on the Universal Base Stand	9
Electrical Connections	10
Service Valve Connection	11

Safety Precautions 12

Initial Certification 13

Normal Operation

Starting The Clean Bench	14
Reading the Filter System Indicator	14
Use Of The Clean Bench	15-16

Routine Maintenance Schedule 17

HEPA Filters 18

Recertification 19

Servicing The Purifier

Changing The Prefilter	20
Changing The Fluorescent Lamps	21
Speed Control Adjustment	22
Diffuser Removal	23
HEPA Filter Replacement	23-24
Motor/Blower Maintenance	24
Motor/Blower Replacement	25
Storage	26

Replacement Parts 27-28

Cabinet Dimensions 29

TABLE OF CONTENTS

Electrical Data Table	30
Motor Specifications	30
Wiring Diagrams	31-32
Troubleshooting	33
References	34
Operating Record Log	35
Warranty	36
Shipping Claims	37
Accessories	38
Contacting Labconco	39
Notes	40

Components Shipped

Carefully check the contents of the carton for damage that might have occurred in transit. Do not discard the carton or packaging material until all components have been checked against the following component list and the equipment has been installed and tested.

As shipped, the carton should contain the following:

Part Number	Description
36125	4 Foot Purifier Clean Bench
37049	Instruction Manual

General Description

The Labconco Purifier Clean Benches are horizontal laminar flow clean benches designed to provide clean air throughout the entire work area. Each bench uses a single High Efficiency Particulate Air (HEPA) filter which has been scan tested at the factory to be at least 99.99% efficient for particles 0.3 micron in size. In operation, each model exceeds Class 100 conditions for cleanliness as defined by Federal Standard 209E.

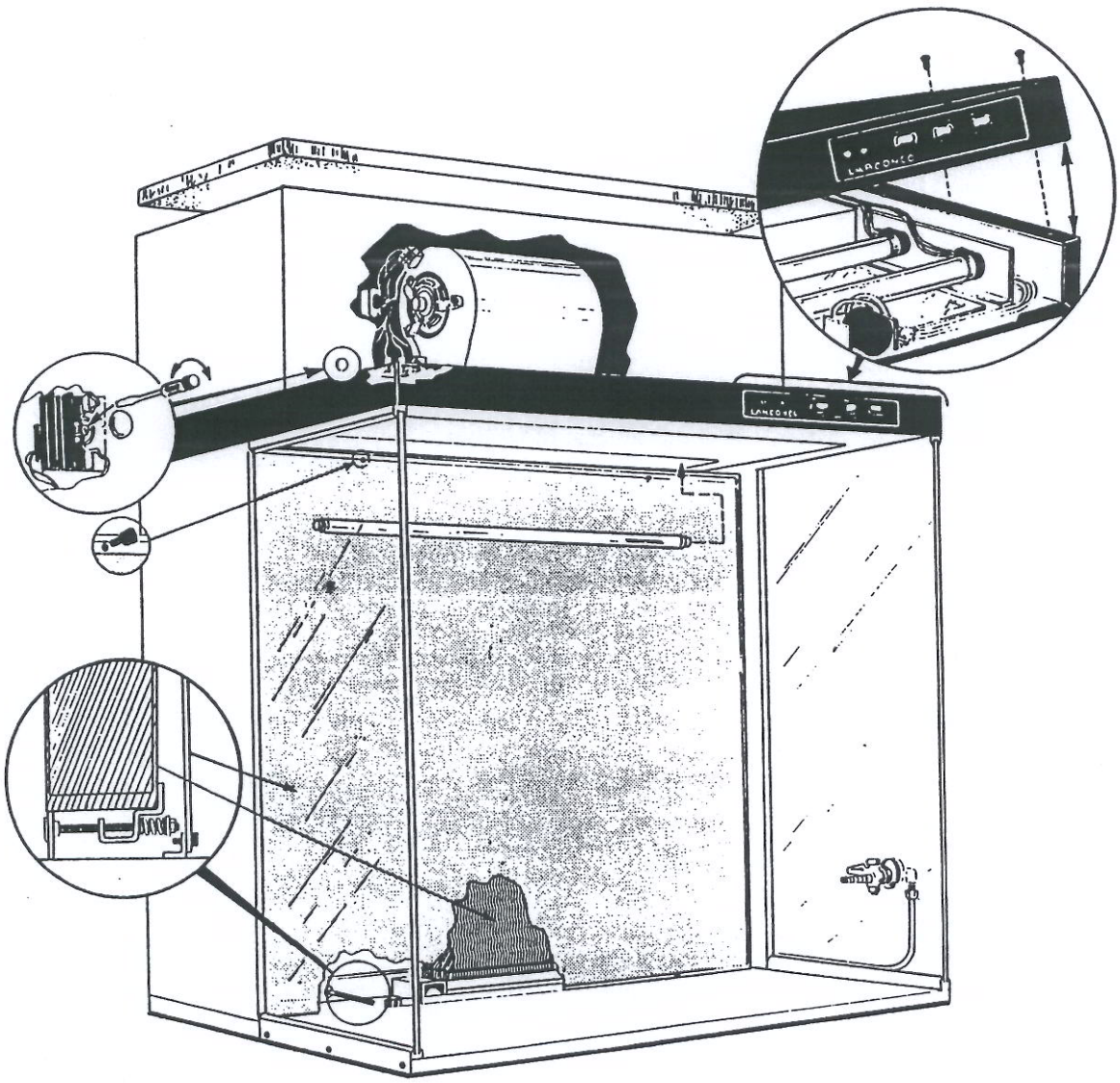

Figure 1

Performance

During operation, room air is drawn through the prefilter on the top of the Clean Bench. The motor/blower(s) force this prefiltered air into the plenum directly behind the HEPA filter. The air in the plenum then flows through the HEPA filter, and the velocity of the HEPA-filtered air is stabilized by a diffuser located in the work area.

The clean air in the work area meets or exceeds Class 100 conditions as defined by Federal Standard 209E, and the motor/blower speed control is factory set to deliver an average nominal airflow of 80 - 100 feet per minute.

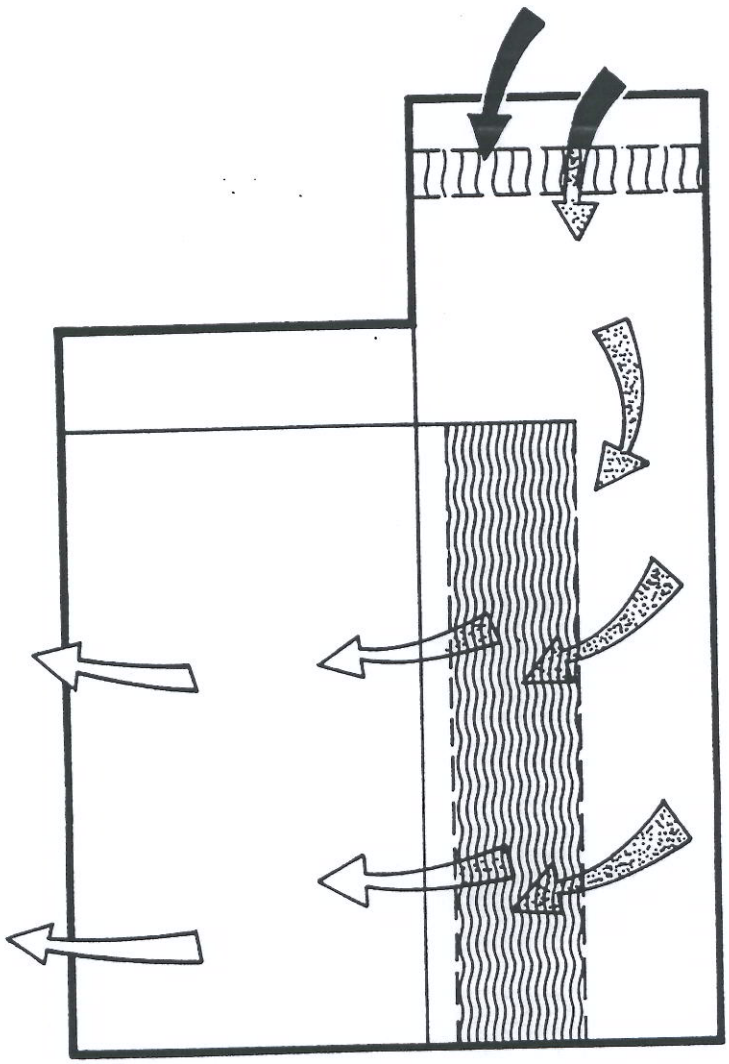

Figure 2

Component Identification (See Figure 3)

(1) **Prefilter.** The prefilter is a disposable filter element that protects the HEPA filter from dust and large particulates.

(2) **Speed Control.** The solid state speed control regulates the speed of the motor/blower.

(3) **Motor/Blower.** The Clean Bench is equipped with a variable speed blower. The low wattage requirements of the permanent split capacitor (PSC) motor reduces operating costs.

(4) **Fluorescent Lamps.** The rapid start lamps are suspended above the work area, out of the air flow. A polycarbonate diffuser beneath the lamps distributes the light evenly across the work surface.

(5) **Filter System Indicator.** The two light system indicates the pressure across the HEPA filter. During operation, a 'normal' indicator light stays on. When the HEPA filter becomes excessively plugged, the 'SERVICE' light turns on, indicating the unit should be serviced.

(6) **Filter Clamping Device.** The clamping devices seal the HEPA filter to the frame of the Clean Bench. The devices are spring-loaded to compensate for filter gasket compression.

(7) **Control Panel.** The control panel, located above the work area, contains the filter system indicator and the control switches.

(8) **Diffuser.** Located in front of the HEPA filter, the diffuser creates an even distribution of air flow through the work area.

(9) **HEPA. (High Efficiency Particulate Air) Filter.** The HEPA filter is rated to remove greater than 99.99% of all particles 0.3 micron in size. After passing through the HEPA filter, the air is directed through the diffuser and over the work area.

Component Identification

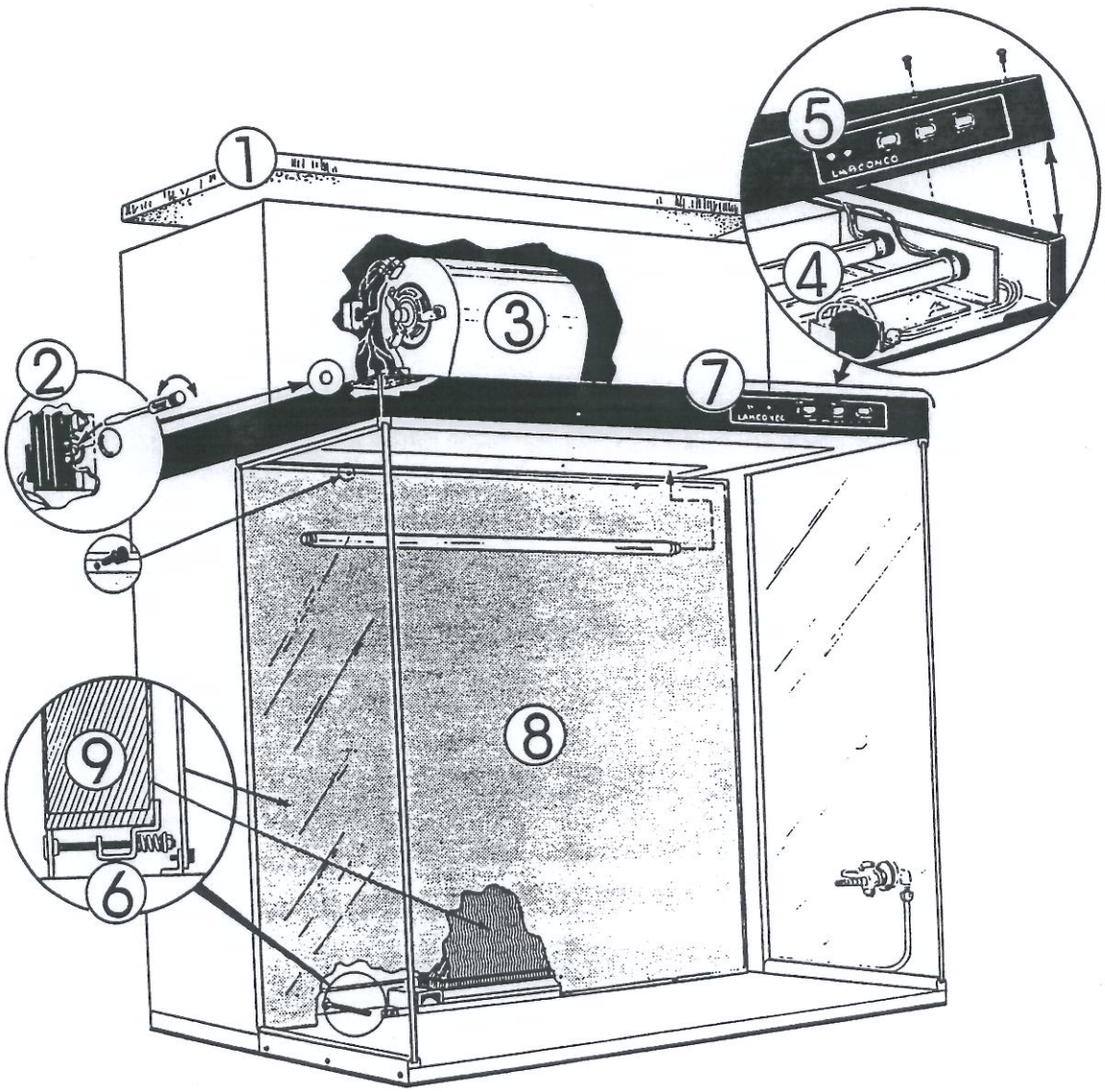

Figure 3

Preparation

DO NOT remove the Purifier Clean Bench from its carton until it is ready to be placed in its final location. Move the Clean Bench by placing a flat, low dolly under the shipping carton. DO NOT move the Clean Bench by tilting it onto a hand truck.

Location

The Clean Bench should be located away from traffic patterns and doors that could disrupt its airflow patterns. The Clean Bench should be located away from fans, heating and air conditioning registers, fume hoods, and any other air handling device that could interfere with its airflow patterns. All windows in the room should remain closed. Figure 4 shows the optimum locations for the Purifier.

There should be a minimum clearance of 12" between the air inlet on the top of the Clean Bench and any overhead obstructions.

The floor should be level, and of solid construction.

DO NOT locate the Clean Bench on a cart, dolly, or mobile bench. ALL Purifier installations should be permanent and stationary.

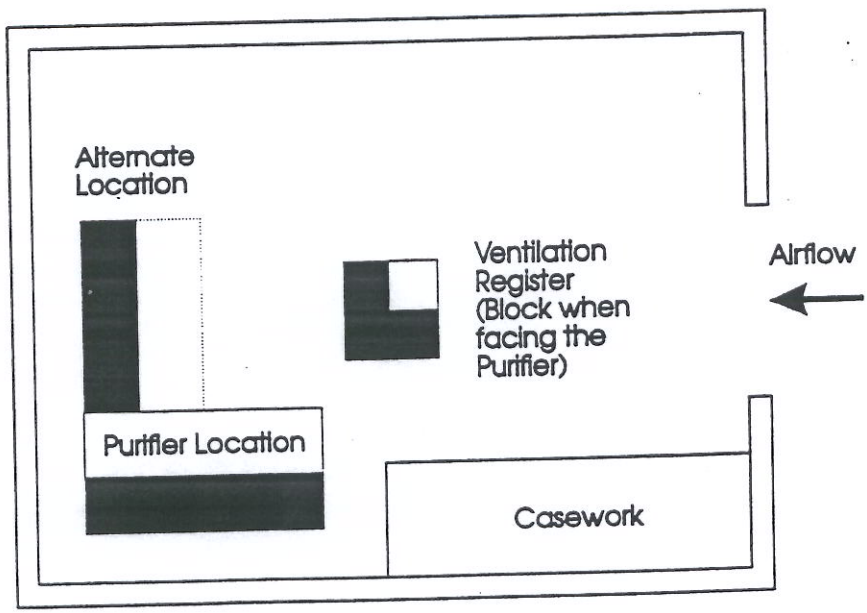

Figure 4

Installing the Clean Bench on the Universal Base Stand

Labconco offers Universal Base Stands to support the Clean Bench as an option to be purchased separately. The base stands are available in two heights, 28 3/4 inches for using the Clean Bench in a sitting position, and 34 3/4 inches to support the unit at a standing height. The Clean Benches, and their stands, are listed below:

Clean Bench Model #	Width (feet)	Universal Base Stand	
		Sitting	Standing
36000, 00, 02, 04, 20, 22, 24	3	80860-00	80860-01
36125, 00, 02, 04, 20, 22, 24	4	80870-00	80870-01
36100, 00, 02, 04, 20, 22, 24	6	80890-00	80890-01

To install the Clean Bench onto the base stand:

1. Placing a carpenter's level or similar device on the Base Stand, turn the feet of the base stand in or out until the unit is level.
2. Center the Clean Bench on the base stand from left to right. The rear of the Clean Bench should be flush with the rear end of the base stand lower rail. This will leave an approximate overhang of 5 11/16 inches over the front rail of the base stand.
3. Using the slots in the mounting angle of the base stand as a template, drill pilot holes approximately 1/8 inch in diameter to a depth of 1/4 inch into the underside of the Clean Bench work surface. The base stand is shown in Figure 5.
4. Secure the Clean Bench to the base stand using six (6) # 14 x 3/4 inch screws provided. Securely tighten the screws.
5. If the Clean Bench is moved after installation, repeat step #4.

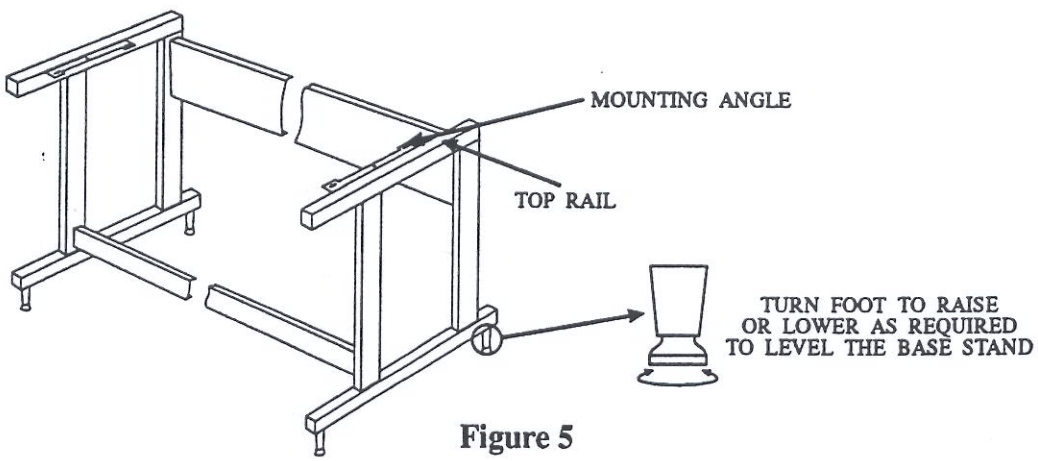

Figure 5

Electrical Connections

The electrical requirements for the different model Clean Benches are as follows:

115 VAC Models:

36000, 00, 02, 04 36125, 00, 02, 04	115 VAC 12 Amp, 60 Hz
36100, 00, 02, 04	115 VAC 15 Amp, 60 Hz

To connect the Clean Bench to electrical service, plug the power cord into the power cord socket located on the right left side of the Clean Bench rear panel, as shown in Figure 6.

230 VAC Models:

36000, 00, 02, 04 36125, 00, 02, 04	230 VAC 7 Amp, 50 Hz
36100, 00, 02, 04	230 VAC 10 Amp, 50 Hz

To connect these Clean Benches to electrical service, attach the appropriate type of plug to the end of the power cord. Plug the power cord into the power cord socket shown in Figure 6.

NOTE: Always follow the plug manufacturer's instructions for the proper assembly and testing of the plug and power cord.

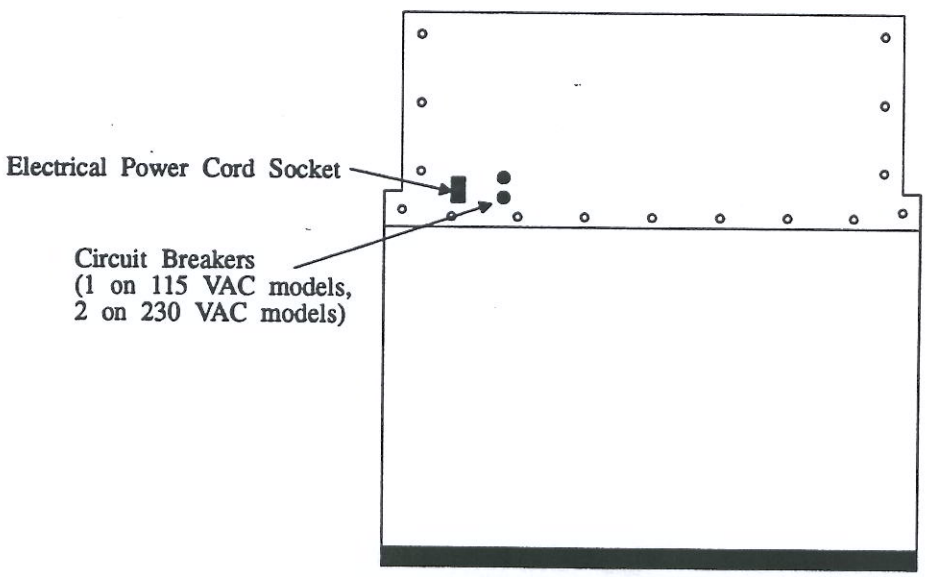

Figure 6

Service Valve Connection

A service fixture has been designed as either a factory installed option, or as a kit that can be installed in the field. The field installed kit includes a replacement side panel with hole, the valve, and its associated fittings. Kit #37032 installs on the right side of the unit, while kit #37033 is used for installation on the left side. An exploded drawing of the valve assembly is shown in Figure 7 below.

Flammable gases or solvents should NOT be used in the Purifier Clean Bench. Gases under high pressure should not be used in the Purifier Clean Bench.

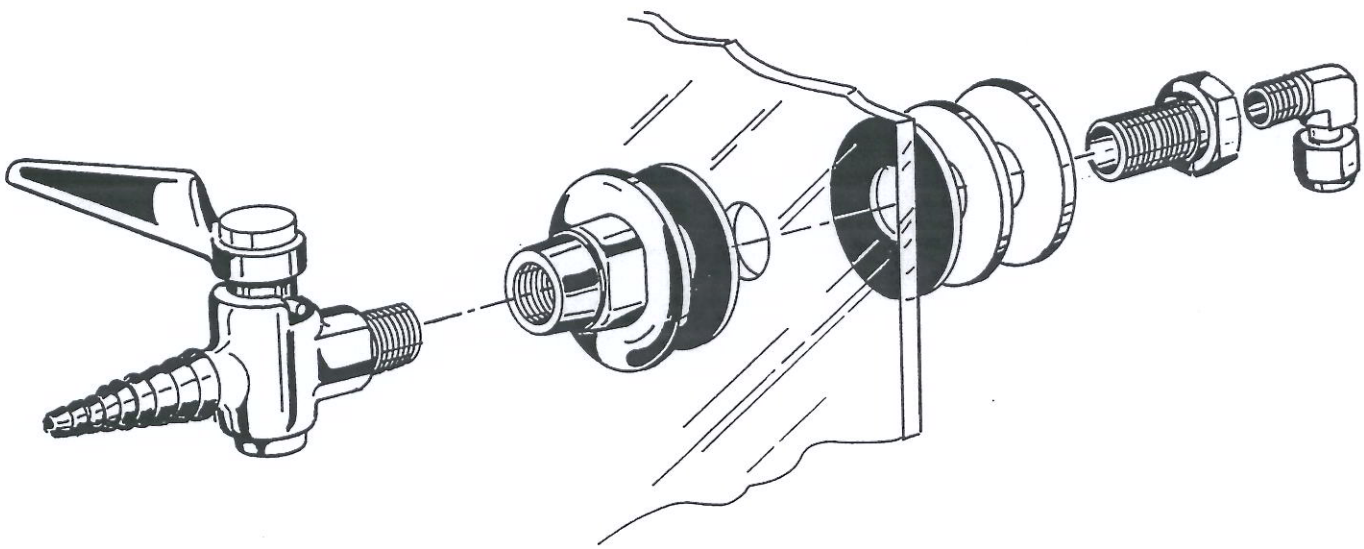

Figure 7

Because air from the work area is dispersed directly into the laboratory, the Purifier Clean Bench should never be used in conjunction with biohazardous material, toxins, or radionuclides. The operator and qualified safety officer(s) must carefully assess the risk associated with any operation performed in a Clean Bench.

The Purifier Clean Bench should be certified by a qualified certification technician before its initial use. The Clean Bench should be recertified whenever it is relocated, serviced, or at least annually thereafter.

Some components of the Purifier Clean Bench should only be serviced by a qualified certification technician. Ensure that the unit is connected to electrical service in accordance with local and national electrical codes. Failure to do so may create a fire or electrical hazard. Do not remove or service any electrical components without first disconnecting the Purifier from electrical service.

Avoid the use of flammable gases or solvents in the Purifier. **Care must be taken to ensure against the concentration of flammable or explosive gases or vapors.** An open flame should **NOT** be used in the Purifier. Open flames may disrupt the airflow patterns in the Clean Bench. Gases under high pressure should not be used in the Purifier Clean Bench, as they may disrupt the airflow patterns.

The surface of the HEPA filter is fragile and should not be touched. Care must be taken to avoid puncturing the HEPA filter during installation or normal operation. If you suspect that the HEPA filter has been damaged **DO NOT** use the Clean Bench; contact a local certification agency or Labconco at 800-821-5525 for recertification information.

The HEPA filter in the Purifier Clean Bench will gradually accumulate airborne particulate matter from the room and from work performed in the Clean Bench. The rate of accumulation will depend upon the cleanliness of the room air, the amount of time the Clean Bench is operating, and the nature of work being done in the Clean Bench is operating, and the nature of work being done in the Clean Bench. In typical installations and usage, the HEPA filters will last two to five years before requiring replacement.

Proper operation of the Clean Bench depends largely upon the Clean Bench's location, and the operator's work habits. Consult the 'Installation' and 'Normal Operation' sections of this manual for further details.

Clean the interior surfaces of the Clean Bench with mild household detergent. DO NOT use abrasive cleaners, bleach, or solvents, as they may damage the work surface.

Avoid direct exposure to ultraviolet radiation. NEVER work in or near the Clean Bench when the UV light is on.

Prior to use, all Purifier Clean Benches should be certified by a qualified certification technician. Under normal operating conditions, the Purifier Clean Bench should be recertified at least annually, if moved, or if serviced. The certifier should perform the following tests, as described in Institute of Environmental Sciences Recommended Practice number IES-RP-CC-0022-86 "Laminar Flow Clean Air Devices".

- Airflow Velocity Test
- HEPA Filter Installation Leak Test
- Introduction Leak Test/Backstreaming (when appropriate)
- Lighting Intensity Test (when appropriate)
- Noise Level Test (when appropriate)
- Vibration Test (when appropriate)

In addition, the following tests should also be performed at the users' discretion:

- Electrical Leakage and Ground Circuit Resistance Test
- Measurement of Line Voltage and Current
- Smoke Test to determine proper airflow patterns

Starting The Clean Bench

To start the Clean Bench, turn the blower switch to the 'On' position, as shown in Figure 8.

Reading the Filter System Indicator

The two light system located on the control panel as shown in Figure 8 indicates the pressure across the HEPA filter. During operation, a green 'NORMAL' indicator light stays on. When the HEPA filter becomes excessively loaded, the 'NORMAL' light turns off and the 'SERVICE' light turns on, indicating the unit should be serviced. A qualified certifier can then determine if the HEPA filter needs to be replaced.

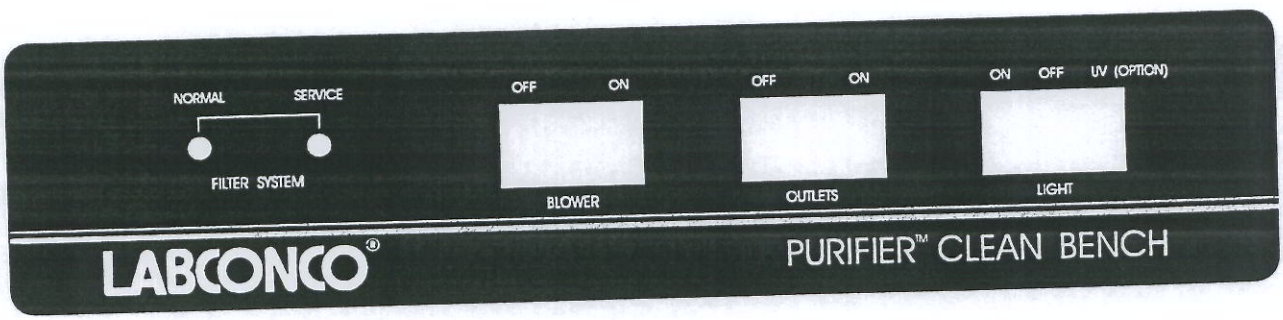

Figure 8

Use Of The Clean Bench

Planning

- Thoroughly understand procedures and equipment required before beginning work.
- Arrange for minimal disruptions, such as room traffic or entry into the room, while the Clean Bench is in use.

Start-up

- Turn on fluorescent light and Clean Bench blower.
- Check the prefilter for obstructions, and note the filter system indicator.
- Wipe down the interior surfaces of the Clean Bench with a mild household detergent. DO NOT use abrasive cleaners, bleach, or solvents, as they may damage the work surface of the Clean Bench.
- Allow the Clean Bench to operate unobstructed for 5 - 15 minutes.
- Wear a long sleeved lab coat with knit cuffs and over-the-cuff rubber gloves. Use protective eyeware.

Loading Materials and Equipment

- Only load the materials required for the procedure. Do not overload the Clean Bench.
- Do not obstruct the air diffuser.
- Large objects should not be placed close together.
- After loading the Clean Bench, wait 2-3 minutes to purge airborne contaminants from the work area.

Use Of The Clean Bench (Con't)

Work Techniques

- Keep all materials at least 4 inches inside of the Clean Bench, and perform all contaminated operations as far to the front of the work area as possible.
- Segregate all clean and contaminated materials in the work area.
- Arrange materials to minimize the movement of contaminated materials into clean areas.
- Keep all discarded contaminated material to the front of the Clean Bench.
- Avoid moving materials or the operator's hands and arms in and out of the work area during use.
- Avoid the use of an open flame.
- Use proper aseptic technique.
- Avoid using techniques or procedures that disrupt the airflow patterns of the Clean Bench.

Final Purging

- Upon completion of work, the Clean Bench should be allowed to operate for 2-3 minutes undisturbed, to purge airborne contaminants from the work area.

Wipe-Down

- Wipe down the interior surfaces of the Clean Bench with a mild household detergent or cleaner, and allow to dry.

Shutdown

- Turn off the fluorescent light and Clean Bench blower.

Under normal operation, your Purifier Clean Bench will require little routine maintenance. The following schedule is recommended:

Weekly

- Wipe down the interior surfaces of the Clean Bench with a mild-household detergent or cleaner, and allow to dry.
- Using a damp cloth, clean the exterior surfaces of the Clean Bench, particularly the front and top of the Clean Bench, to remove any accumulated dust.

Monthly
(or more often as required)

- Check all service valves, if so equipped, for proper operation.
- Check the Prefilter and replace if necessary. The prefilter should be replaced at least quarterly.
- All weekly activities.

Quarterly

- Replace the prefilter.
- All monthly activities.

Annually

- Have the Clean Bench recertified by a qualified certification technician.
- All quarterly activities.

Biannually

- Replace the fluorescent lamps if required.
- All annual activities.

HEPA FILTERS

The HEPA filter in the Purifier Clean Bench will gradually accumulate airborne particulate matter from the room. The rate of accumulation will depend upon the cleanliness of the room air, the amount of time the Clean Bench is operating, and the nature of work being done in the Clean Bench. In typical installations and usage, the HEPA filters will last two to five years before requiring replacement.

To determine if the HEPA filter should be replaced, remove or replace the prefilter. With the speed control adjusted fully clockwise, the average airflow is less than 80 FPM, the filter should be replaced.

The HEPA filter is Labconco part #3605502, and measures 48" x 30" x 5-7/8".

Under normal operating conditions, the Purifier Clean Bench should be recertified at least annually, if moved, or if serviced. The certifier should perform the following tests, as described in Institute of Environmental Sciences Recommended Practice number IES-RP-CC-002-86 "Laminar Flow Clean Air Devices".

- Airflow Velocity Test
- HEPA Filter Installation Leak Test
- Introduction Leak Test/Backstreaming (when appropriate)
- Lighting Intensity Test (when appropriate)
- Noise Level Test (when appropriate)
- Vibration Test (when appropriate)

In addition, the following tests should also be performed at the users' discretion:

- Electrical Leakage and Ground Circuit Resistance Test
- Measurement of Line Voltage and Current
- Smoke Test to determine proper airflow patterns

Changing The Prefilter

The Prefilter should be replaced at least quarterly, or more often, as conditions require.

(1) Carefully lift the prefilter element straight up and out of the Clean Bench.

(2) Install a new prefilter element by pressing it into position in the Clean Bench. The filter should be installed with the blue side down.

The prefilter for the Purifier Clean Benches is Labconco part #3603202.

Changing The Fluorescent Lamps

(1) Unplug the Clean Bench.

(2) Locate and remove the six phillips head screws at the edge of the canopy as shown in Figure 9.

(3) Pull the canopy top out slightly, then tilt it up.

(4) Lean the canopy cover against the Clean Bench to allow access to the fluorescent lamps. Secure the canopy cover with tap if necessary.

(5) Remove the fluorescent lamps by rotating and pulling them straight out of their sockets.

(6) Install the new lamps by reversing the removal procedure.

The fluorescent lamps for the 4 foot Clean Bench are 2 each Labconco part #1270500.

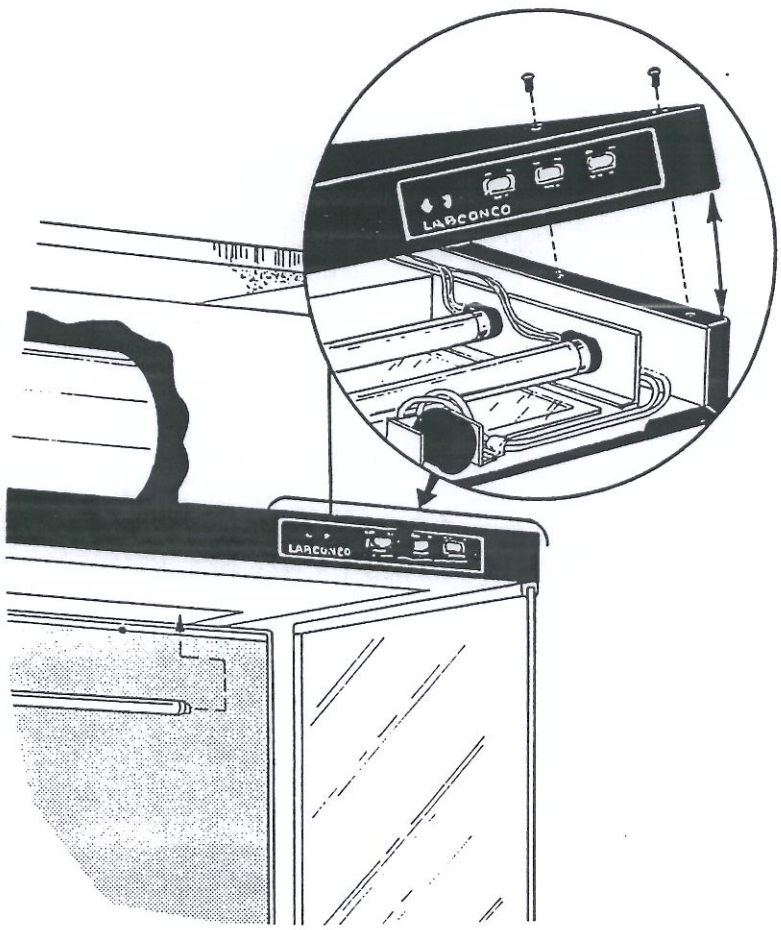

Figure 9

Speed Control Adjustment

Adjusting the speed control will have an effect on the air velocities and the efficiency of the Clean Bench. **The speed control should only be adjusted by a qualified certification technician as part of recertification procedure.**

(1) Locate and remove the plastic hole plug on the bottom of the blower housing, directly above the canopy.

(2) Using a medium sized, straight blade screwdriver, turn the speed control screw clockwise to increase the blower(s) speed, as shown in Figure 10.

(3) After completing the speed control adjustment, establish the average air velocity, using a calibrated anemometer with an accuracy of +/-3%. Establishing a boundary of 6" from the sides, top, and bottom, measure the velocities in 6" increments, 6" in front of the diffuser. This method is defined more fully in IES Recommended Practice #IES-RP-CC-002-86.

(4) The average velocity should be 90 +/-10 FPM, with all measured values falling within +/20% of the average.

(5) Replace the plastic hole plug.

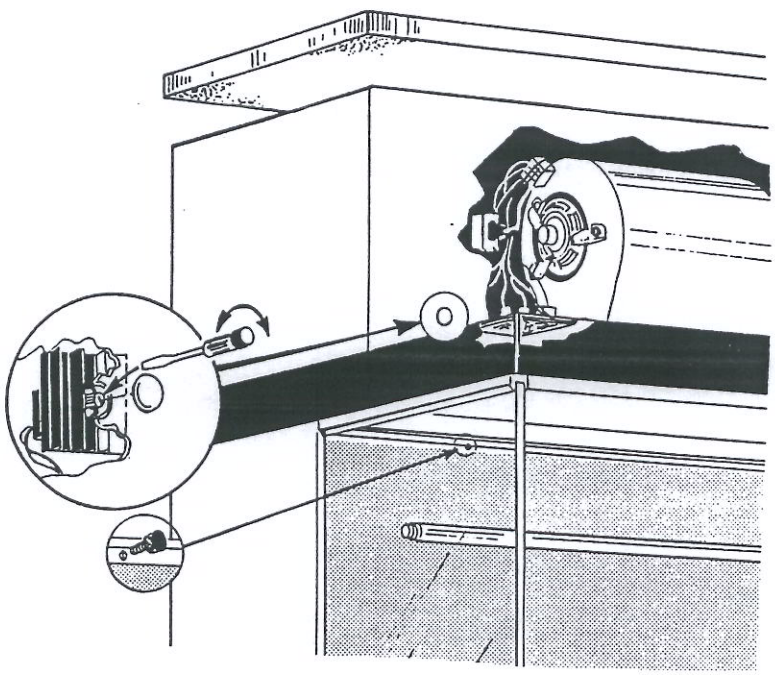

Figure 10

Diffuser Removal

(1) Locate the diffuser captive screws, shown in Figure 11. Loosen all of the screws and remove the diffuser by pulling it straight forward.

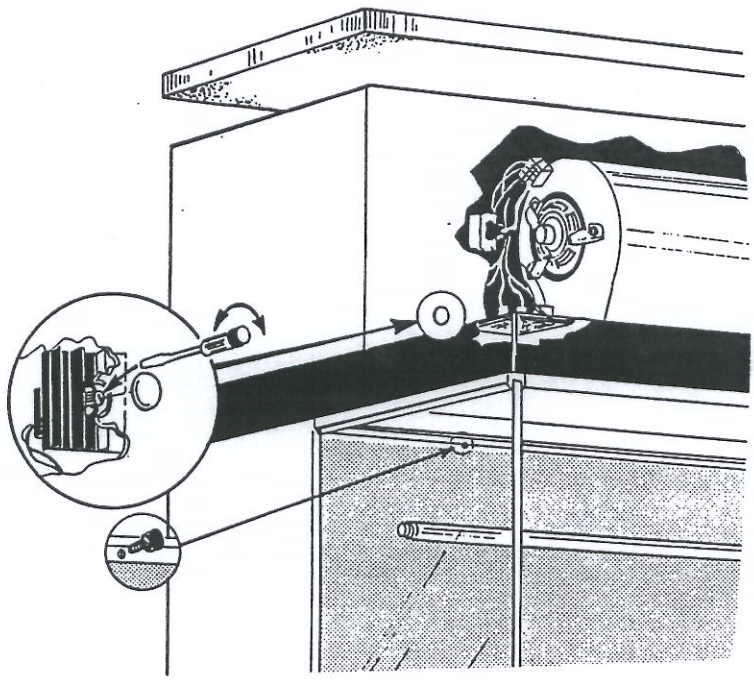

Figure 11

HEPA Filter Replacement

The HEPA filter should only be serviced by a qualified certification technician. Following replacement of a HEPA filter, the Clean Bench MUST be recertified by a qualified certification technician.

(1) Unplug the Clean Bench.

(2) Locate the diffuser captive screws, shown in Figure 11. Loosen all of the screws and remove the diffuser by pulling it straight forward.

(3) Loosen and remove all of the filter clamping devices. If the clamp binds onto the clamping rod, GENTLY tap or pry the clamp loose. Remove the filter by pulling it straight out of the unit. Install the new filter by reversing the above steps.

HEPA Filter Replacement (Con't)

NOTE: The Clamping Devices must be tightened enough to ensure a proper seal. At proper tightness, the spring should be compressed to a height of 1".

(4) Tighten the clamping devices uniformly until the filter gasket is properly compressed against the Clean Bench frame.

(5) Perform a HEPA filter leak test as described in IES Recommended Practice IES-RP-CC-002-86.

(6) Install the diffuser and uniformly tighten the captive screws.

Adjusting the Filter Indicator Light System

The Filter Indicator System indicates if the differential pressure across the HEPA filter is too high for proper operation. It is adjusted at the factory, and should only require readjustment when the HEPA filter is replaced. For proper operation, adjust the Filter Indicator Light System BEFORE establishing the average face velocity. **The filter Indicator System should only be adjusted by a qualified certification technician as part of the recertification procedure.**

(1) Turn the blower(s) on, and the blower speed control to the full speed setting.

(2) Locate and remove the six Phillips head screws at the edge of the canopy as shown in Figure 12. Pull the canopy top out slightly then tilt it up.

(3) If the 'NORMAL' light is on, insert the appropriate hex wrench, and turn the pressure switch adjustment screw SLOWLY counterclockwise until the 'SERVICE' light turns on. Go to step #4.

(4) If the 'SERVICE' light is on, insert the appropriate hex wrench, and turn the pressure switch adjustment screw SLOWLY clockwise until the 'NORMAL' light turns on. Reattach the canopy top.

(5) Turn the blower speed down, as required to establish the average velocity as described in the Speed Control Adjustment Section on page 20, or in the IES recommended practice IES-RP-CC-002-86. Replace the speed control cover plug when finished.

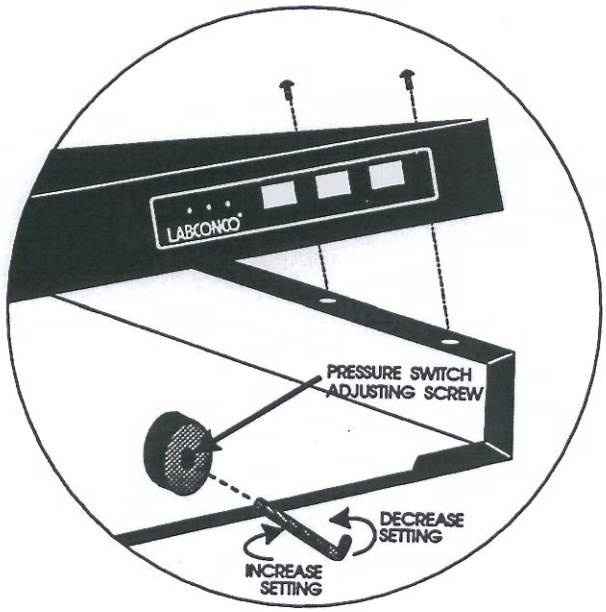

Figure 12

Motor/Blower Service

The motor bearings are permanently lubricated and require no oil for the first 10,000 hours of operation

Motor/Blower Replacement

The motor/blower should be serviced by a qualified certification technician. Following replacement of a motor/blower, the Clean Bench MUST be recertified by a qualified certification technician.

(1) Unplug the Clean Bench.

(2) Remove the prefilter

(3) Using the appropriate wrenches, disconnect the motor ground wire from the frame, and the 4 blower mounting nuts from the blower frame.

(4) Using a small screwdriver, disconnect the cabinet wiring harness from the terminal strip attached to the blower housing.

NOTE: The motor/blower assembly is heavy. Handle with care.

(5) Lift blower assembly unit straight up and out of the Clean Bench.

(6) To replace the motor/blower assembly, reverse the above procedure.

Storage

If the Purifier Clean Bench is to be left unused for more than 1 month, the unit should be prepared for storage.

(1) Unplug the unit.

(2) Cover and seal the prefilter and the work area opening with plastic sheeting.

(3) Ensure that the Clean Bench will not be moved or disturbed while in storage.

NOTE: The Clean Bench should not be stored in areas of excess humidity or temperature extremes. If the Clean Bench is moved during storage, it must be recertified before use.

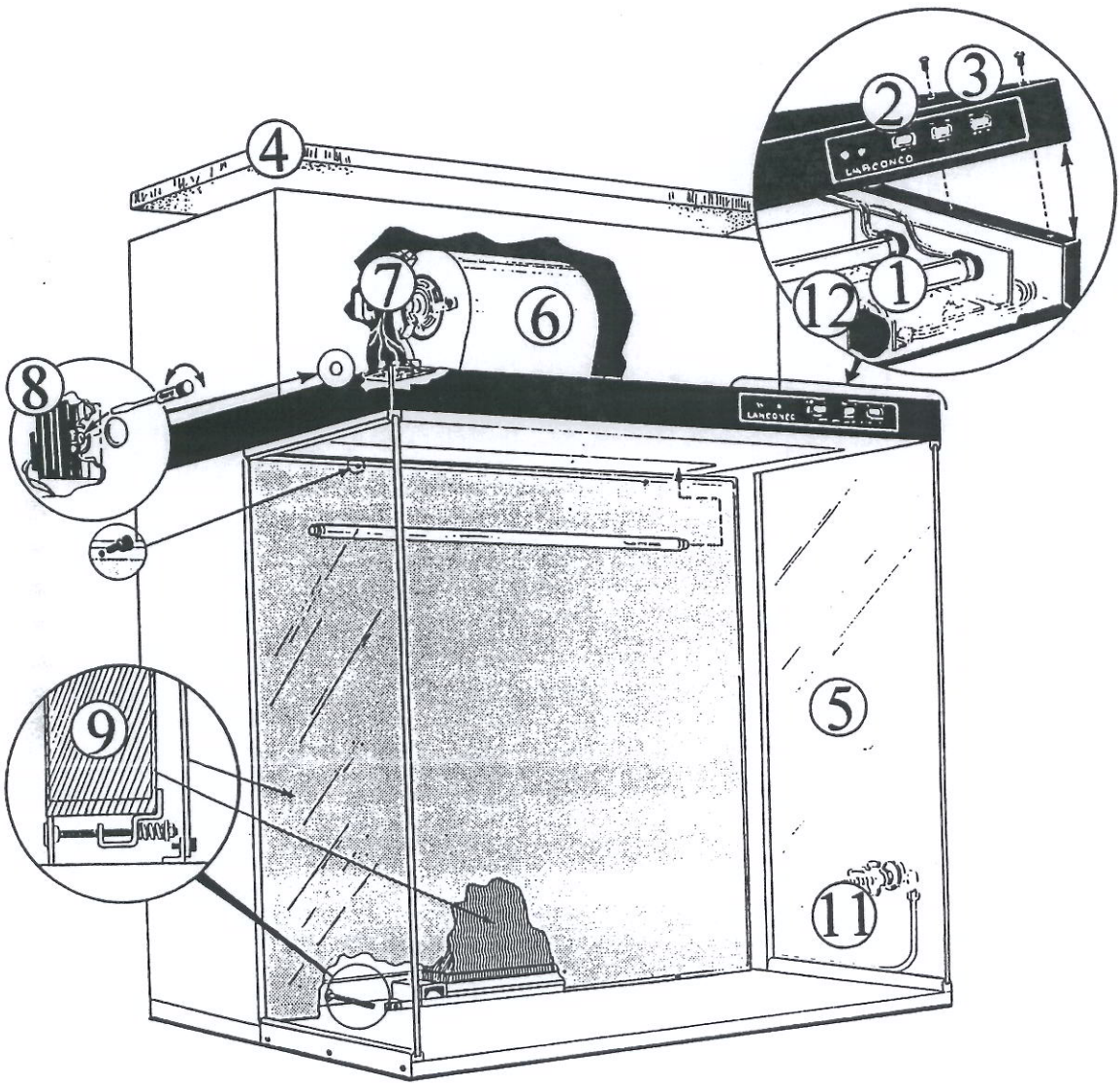

Figure 13

Model 36125

ITEM	QTY	PART NO.	DESCRIPTION
1	2	1270500	Fluorescent Lamp
2	2	1302300	Switch - 2 position
3	1	1302400	Switch - 3 position (Lights)
4	1	3603202	Prefilter
5	1	3703000	Side Panel Assembly, Right
5A	1	3703001	Side Panel Assembly, Left
6	1	3703401	Motor/Blower Assembly, 115 VAC
6A	1	3703501	Motor/Blower Assembly, 230 VAC
7	1	1209300	Motor, 115 VAC
7A	1	1210500	Motor, 230 VAC
8	1	3704400	Speed Control, 115 VAC
8A	1	3704401	Speed Control, 230 VAC
9	1	3605502	HEPA Filter
10	1	3697500	IV Rod (Not Shown)
11	1	3703200	Service Valve Installation Kit, Right
11A	1	3703300	Service Valve Installation Kit, Left
12	1	1303700	Pressure Switch

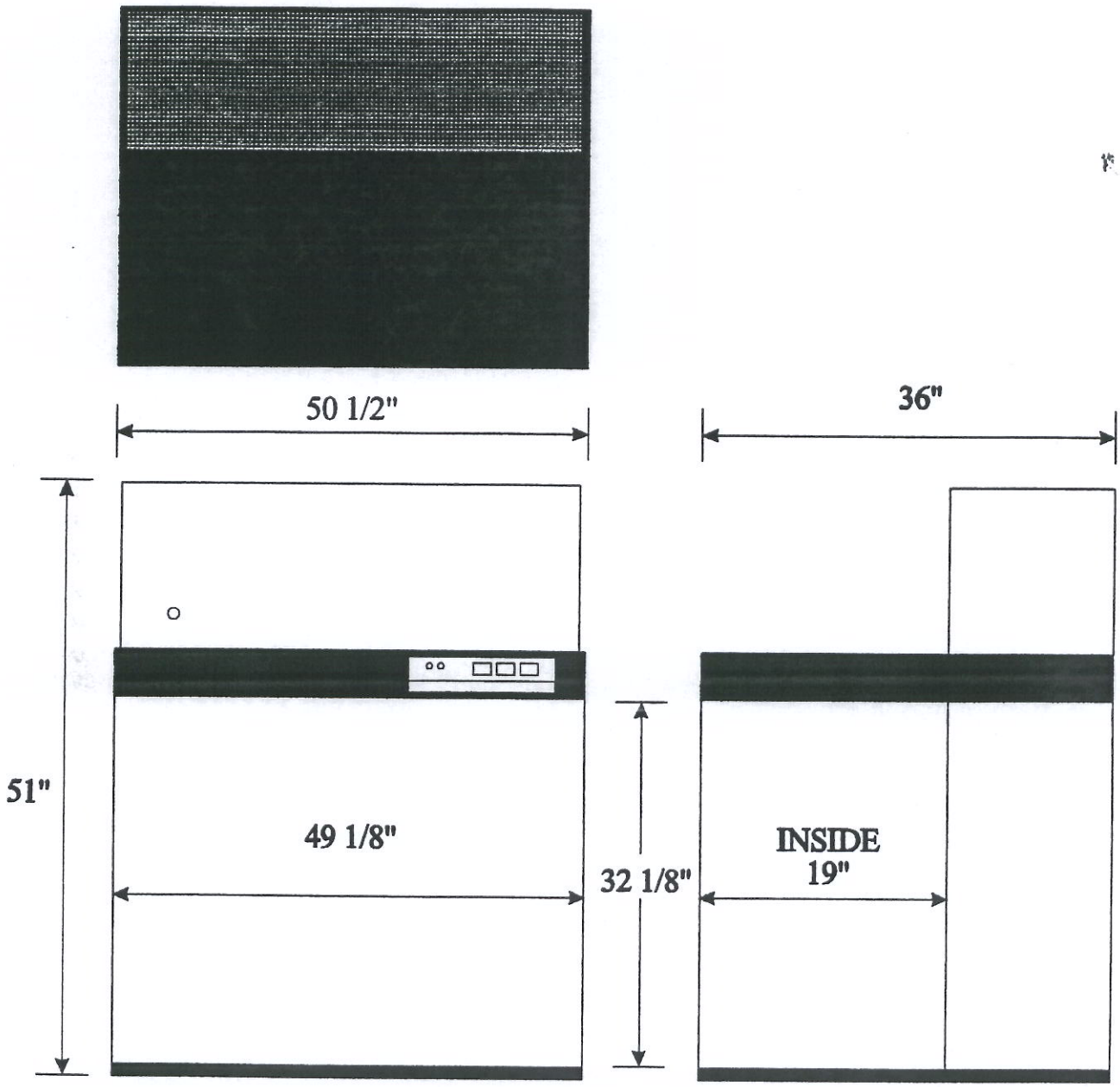

Figure 14

ELECTRICAL DATA TABLE

CABINET MODEL	ELECTRICAL REQUIREMENTS
36125-00, 02, 04	115 VAC - 60 Hz 1 Phase - 12 Amp
36125-20, 22, 24	230 VAC - 50 Hz 1 Phase - 7 Amp

MOTOR SPECIFICATIONS

MODELS 36125-00, 02, 04	MODEL 36125-20, 22, 24
115 VAC 60 Hz 5.1 Full Load Amps 1/3 Horsepower 1075 RPM Automatic Thermal Protection	230 VAC 50/60 Hz 2.8 Full Load Amps 1/2 Horsepower 1625 RPM Automatic Thermal Protection

Models 36125-00, 02, 04

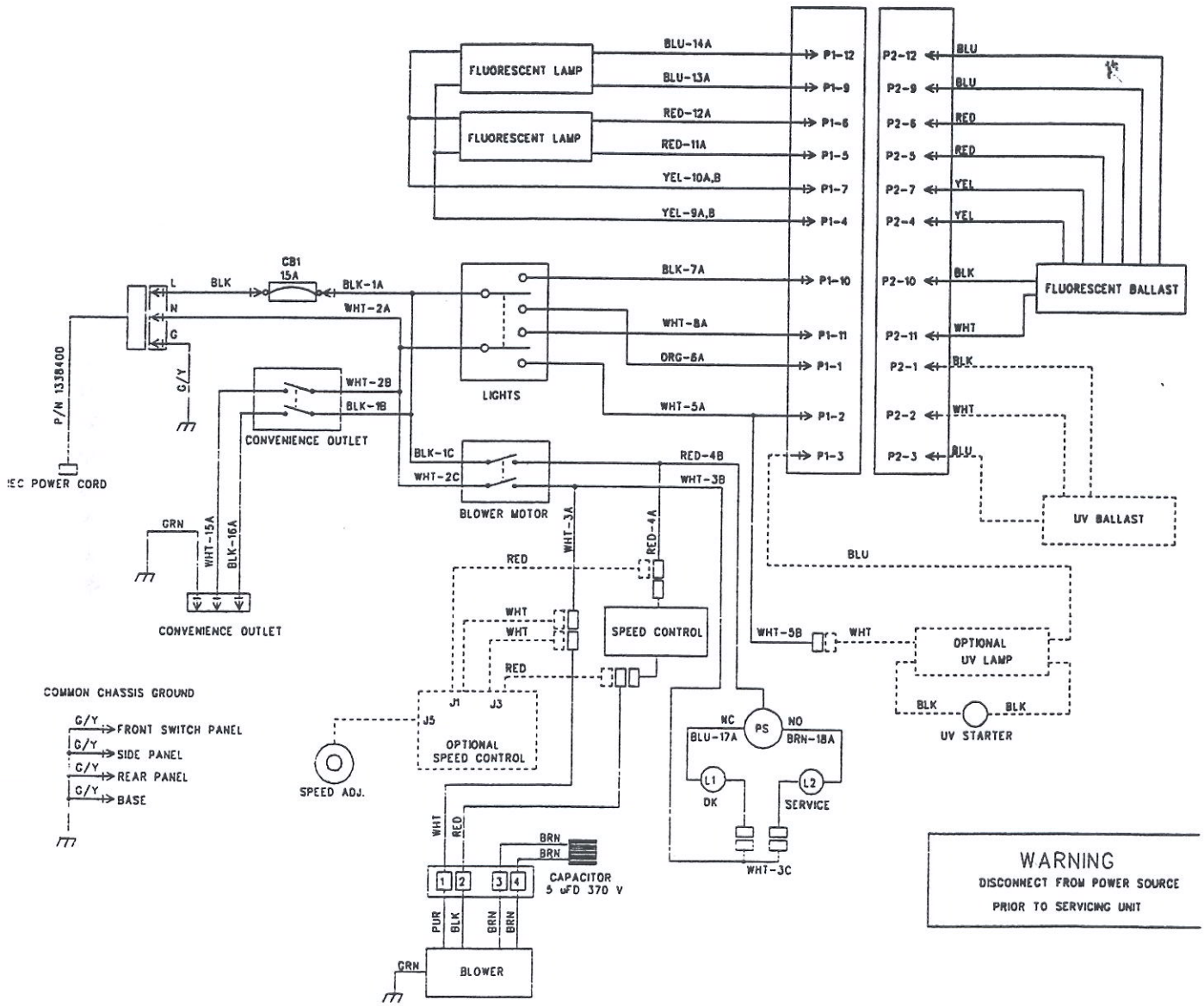

Figure 15

Models 36125-20, 22, 24

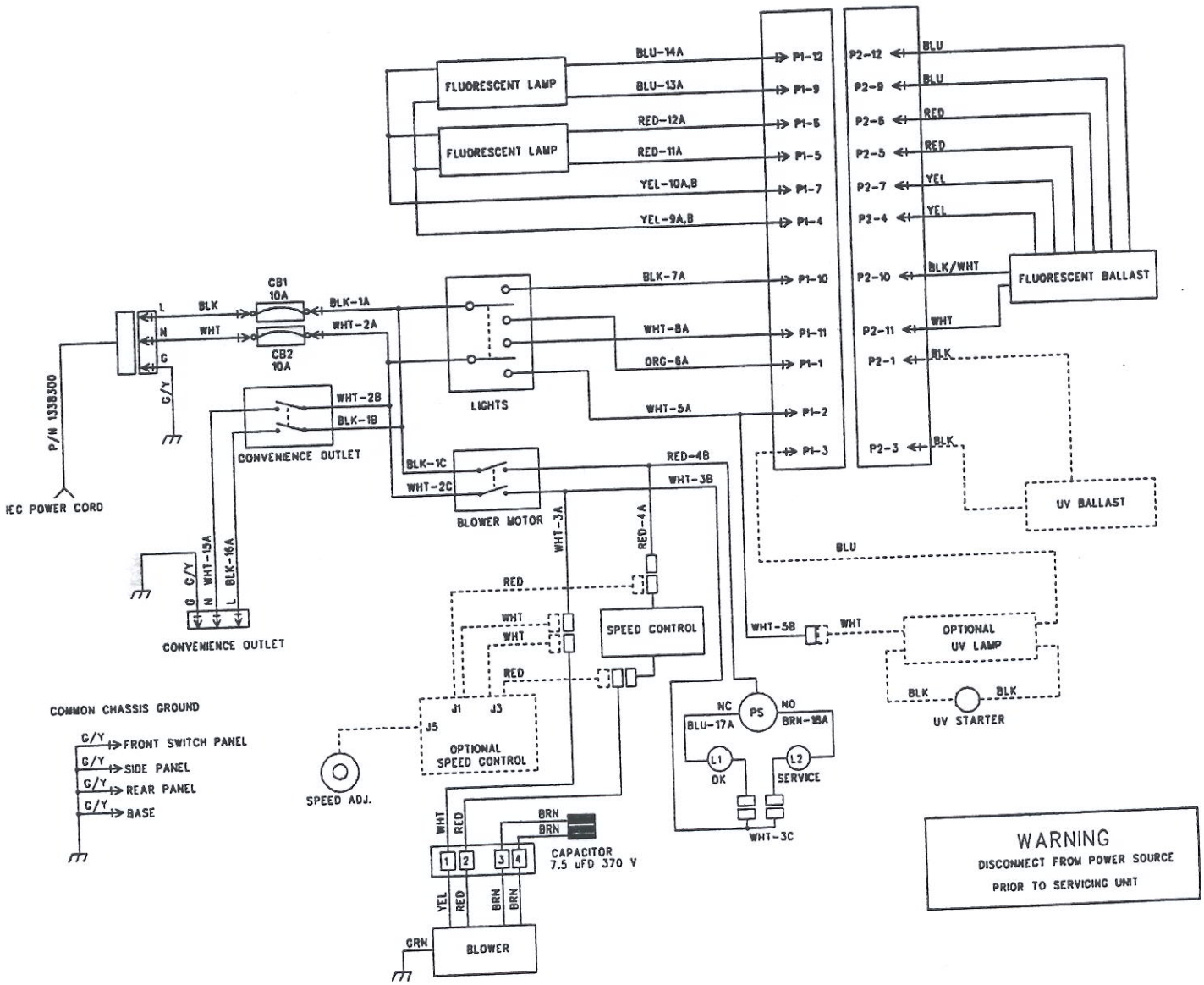

Figure 16

PROBLEM	CAUSES	CORRECTIVE ACTION
Clean Bench blower and lights won't turn on.	Unit not plugged into outlet	Plug the Purifier into appropriate electrical service
	Circuit breakers tripped	Reset circuit breakers
Lights work but motor won't run	Speed Control out of adjustment	Have speed control adjusted
	Defective speed control	Replace speed control
	Defective motor	Replace motor
'Service' light is on	Blockage of the prefilter or diffuser	Ensure that both the prefilter and diffuser are clear
	Filter Indicator System is out of adjustment	Readjust the pressure switch as described in the 'Adjusting the Filter Indicator Light System' section
	HEPA filter loading	The light will turn on when the HEPA filter is plugged
Contamination of work in the Clean Bench	Improper technique or procedure for the Clean Bench	See 'Use of the Clean Bench' section in this manual
	External factors are disrupting the Clean Bench airflow patterns or acting as a source of contamination	See 'Installation' section of this manual
	Clean Bench is out of adjustment/HEPA filter(s) are defective	Have Clean Bench recertified

REFERENCES

Many excellent reference texts and booklets are currently available. The following is a brief listing:

Bryan, D., and R.C. Marback. 1984. Laminar-airflow equipment certification: What the pharmacist needs to know. American Journal of Hospital Pharmacy. 41. 1343-1348.

Labconco Corporation. 1990. Purifier Class II Safety Cabinets and Clean Benches. Kansas City, MO.

General Services Administration. 1988. FED-STD-209E Federal Standard - Clean Room and Work Station Requirements, Controlled Environment. Washington, D.C.

IES Recommended Practice: IES-RP-CC-001-86. Recommended Practice for HEPA Filters. Mt. Prospect, IL: Institute for Environmental Sciences. 1986.

IES Recommended Practice: IES-RP-CC-002-86. Laminar Flow Clean Air Devices. Mt. Prospect, IL: Institute for Environmental Sciences. 1986.

IES Document: IES-CC-011-85-T. A Glossary of Terms and Definitions Related to Contamination Control. Mt. Prospect, IL: Institute for Environmental Sciences. 1985.

Customer Name_____ Model Number_____

Date Installed_____ Serial Number_____

Unit Location_____

Week #	Date	Comments

We are committed to providing our customers with quality equipment and service after the sale. Part of this objective involves keeping you informed of changes and new product additions. We therefore request that you take a moment to fill out the product registrations card so we may know your location as well as some of the reasons that prompted you to purchase our products.

Labconco Corporation warrants products of its manufacture for one year, from receipt of the equipment by the purchaser, against defects in materials and workmanship. This limited warranty covers parts and labor but not transportation and insurance charges. In the event of a warranty claim contact the dealer who sold you the product. If the cause is determined to be a manufacturing fault, the dealer or Labconco Corporation will repair or replace all defective parts to restore the unit to operation. **Under no circumstance shall Labconco Corporation be liable for indirect, consequential or special damages of any kind.** This statement of warranty may be altered by a specific published amendment. No individual has authorization to alter provisions of this warranty policy or its amendments. Lamps and expendable items such as filters are not covered by this warranty. Damage due to corrosion or accidental breakage are also not covered.

WARNING: The disposal and/or emission of substances used in connection with this equipment may be governed by various federal, state or local regulations. All users of this equipment are urged to become familiar with any regulations that apply in the user's area concerning the dumping of waste materials in or upon water, land or air and to comply with such regulations.

If shipment is received in visibly damaged condition, be certain to make a notation on the delivering carrier's receipt and have his agent confirm the damage on your receipt. Otherwise, the damage claim may be refused.

If concealed damage or pilferage is discovered, notify the carrier immediately and retain the entire shipment intact for inspection. Interstate Commerce Commission rules require that the claim be filed with the carrier within 15 days after delivery.

NOTE: Do not return goods. Goods returned without prior authorization will not be accepted. Labconco Corporation and its dealers are not responsible for shipping damage. Claims must be filed directly with the freight carrier by the recipient. If authorization has been received to return this product, by accepting this approval, the user assumes all responsibility and liability for biological and chemical decontamination and cleansing. Labconco reserves the right to refuse delivery of any products which do not appear to have been properly cleaned and/or decontaminated prior to return.

Accessory Part #	Description
80870-00	**Universal Base Stand for 4-Foot Clean Bench** 50-3/8" wide x 27" deep x 28-3/4" high. Height allows unit to be used while sitting.
80870-01	**Universal Base Stand for 4-Foot Purifier Clean Bench** 50-3/8" wide x 27" deep x 34-3/4" high. Height allows cabinet to be used while standing.
36975-00	**I.V. Bar Kit** Bar attaches to the interior of the Clean Bench and allows the hanging of multiple intravenous solution containers. One required.
37032-00	**Service Valve Kit, Right** Includes a new right side panel assembly with a quarter turn valve installed in the panel.
37033-00	**Service Valve Kit, Left** Includes a new left side panel assembly with a quarter turn valve installed in the panel.
37069-01	**Closure Kit** Includes a vinyl sheet and attachments such that the work opening of the Clean Bench can be closed off when not in use.

CONTACTING LABCONCO

If you have any questions that are not addressed in this manual, or if you need technical assistance, please contact Labconco's Customer Service Department at either (800) 821-5525, or (816) 333-8811, between the hours of 7:00 a.m. and 6:00 p.m. Central Standard Time.

Visit Labconco through the Internet at:

http://www.labconco.com

or

email:labconco@labconco.com