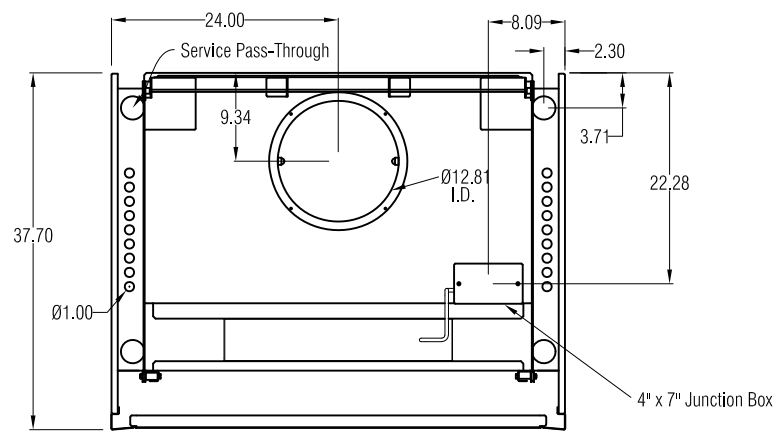

TOP VIEW

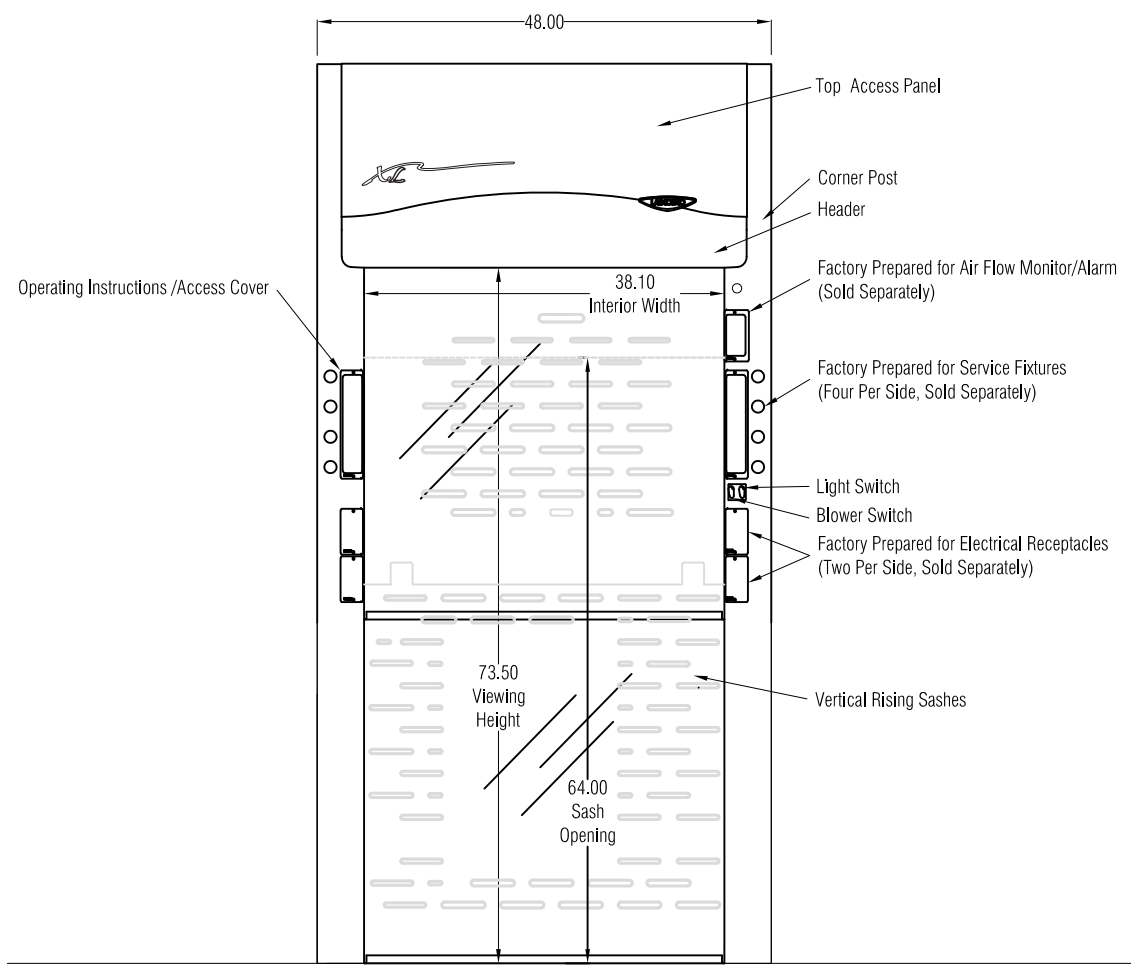

FRONT VIEW

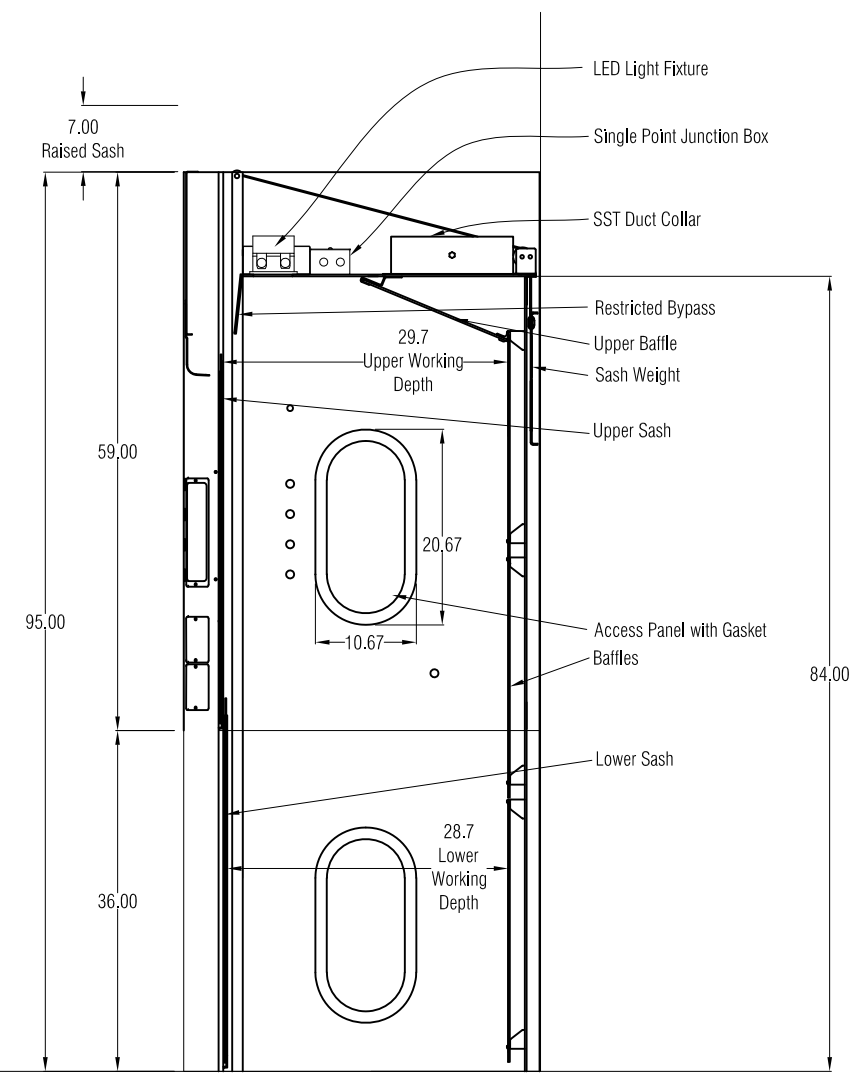

SIDE VIEW

GENERAL DESCRIPTION

4' Protector XL Floor Mount Hood, 37.7" Exterior
Model: 112417000

Exterior Superstructure
* Double Wall Construction * 18 Gauge Cold Rolled Steel

Interior Superstructure
* Galvanized Steel (standard)

Left / Right Facia:
* Powder Coated Steel * Color: Glacier White

Liner Material
* Molded Composite Sheet

Side Panels
* Both Sides * Removable * Color: Glacier White

Baffles
* Molded Composite Sheet

Interior Access Panels
* Right and Left Sides
* Gasket Provided

Corner Post with Access Covers
* Right and Left Sides
* 18 Gauge Cold Rolled Steel

Sash
* Vertical Travel
* Tempered Safety Glass
* Counter Weighted and Balanced
* Pulley System

Electrical Fixtures
* LED Light and Tubes w/ Switch

Alarm / Monitor (Sold Separately)
* Factory Prepared for Air Flow Monitor/Alarm

Wiring
* Fume Hood Wired at Factory
* Electrical Connection made inside 4x7 Junction Box
* 100–115V, 50/60 Hz

VAV Preparations
* Restricted Bypass for VAV

Service Fixtures (Sold Separately)
* Factory Prepared for Service Fixtures, Four Per Side

Required Accessories (Sold Separately)
* Remote Blower

	Airflow Volumetric Rate (CFM) @ Static Pressure (inches of water)	
Face Velocity (fpm)	100% open (top sash 64" from floor & bottom sash fully lowered)	62.5% open (top sash 54" from floor & bottom sash fully lowered)
100	725 @ 0.27"	450 @ 0.11"
80	580 @ 0.17"	365 @ 0.07"
60	435 @ 0.10"	270 @ 0.04"

Assembly and Crating
* Floor–Mounted Fume Hoods are shipped partially unassembled and require field assembly (not provided by Labconco.) Assembly includes placement of lower and upper portions, installation of corner posts, baffles, header, and sashes, and connection of piping and electrical (if included.) Detailed instructions are available at http://www.labconco.com/resources/manuals or upon request.
* Palletized (3 pallets for 4 ft floor mounted hood)

SCALE: Scaled to fit

FUME HOODS for:

LABCONCO

LABCONCO CORPORATION • KANSAS CITY MO USA 64132
800-821-5525 / 816-333-8811 • labconco.com

Rev	Date

Date: July 2023

Drawing # 112417000

Drawn By: C. Alumbaugh

Checked By:

Approved By:

Sheet No.