3 Foot Purifier®
TOTAL EXHAUST CLEAN BENCH
Trace Metal Analysis Work Station

INSTRUCTION MANUAL

Models 37500-03

Product designs are subject to change without notice
© 1999 Labconco Corporation
Form 37283 / ECO 9888
Printed in U.S.A.

TABLE OF CONTENTS

Introduction

Components Shipped	3
General Description	4
Performance	5
Component Identification	6-7

Installation

Preparation	8
Location	8
Exhaust Duct Connection	9
Exhaust System Connection	9
Electrical Connections	10

Safety Precautions 11-12

Initial Certification 13

Normal Operation

Starting The Clean Bench	14
Reading the Filter System Indicator	14
Use Of The Clean Bench	15-16

Routine Maintenance Schedule 17

HEPA Filters 18

Recertification 19

Customer Service Operations

Changing the Prefilter	20
Sash Adjustment	21
Dress Panel Removal	21
Fluorescent Lamp Removal	21
Changing a Lamp Starter	22

TABLE OF CONTENTS

Certifier Service Procedures

Speed Control Adjustment	23
Filter Indicator System Adjustment	23
HEPA Filter Replacement	24
HEPA Filter Leak Test	25
Exhaust Volume Test Procedure	25
Blower Replacement	26
Calculating Average Downflow Velocity	26
Calculating Supply Air Volume	26
Calculating Average Inflow Velocity	26
Storage	27
Replacement Parts	28-29
Cabinet Dimensions	30
Electrical Data Table	31
Wiring Diagram	32
Airflow Calculations	33
Troubleshooting	34
References	35
Operating Record Log	36
Warranty	37
Shipping Claims	38
Contacting Labconco	39

Components Shipped

Carefully check the contents of the carton for damage that might have occurred in transit. Do not discard the carton or packaging material until all components have been checked against the following component list and the equipment has been installed and tested.

As shipped, the carton should contain the following:

Part Number	Description
37500-03	3 Foot Purifier Total Exhaust Clean Bench
37274-00	Instruction Manual

General Description

The Purifier Total Exhaust Clean Bench is a HEPA (High Efficiency Particulate Air) filtered enclosure that provides product protection from external contamination, while protecting personnel and the laboratory from chemicals used in the work area. A metal-free airpath through the unit minimizes the possibility of contamination of the air with metal particles.

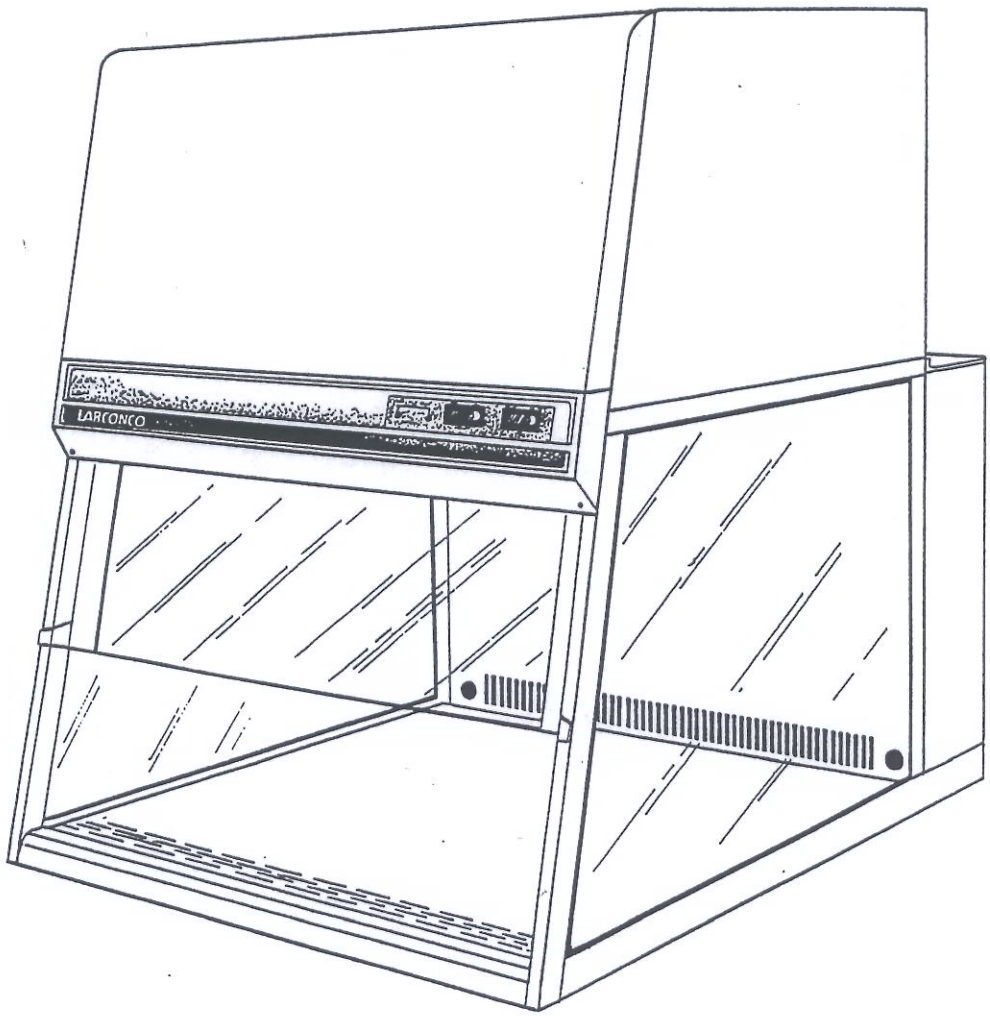

Figure 1

Performance

During operation, room air is drawn in at the top of the unit through prefilter elements, and then pressurized by the unit's blowers. This air then passes through HEPA filter, and flows vertically through the work area. After passing through the work area, all of the air in the work area, plus a volume drawn into the front of the unit is drawn under the work surface, up the rear duct, and out of the unit.

The clean air in the work area meets or exceeds Class 100 conditions as defined by Federal Standard 209E, and the motor/blower speed control is factory set to deliver an average nominal downflow of 60 feet per minute.

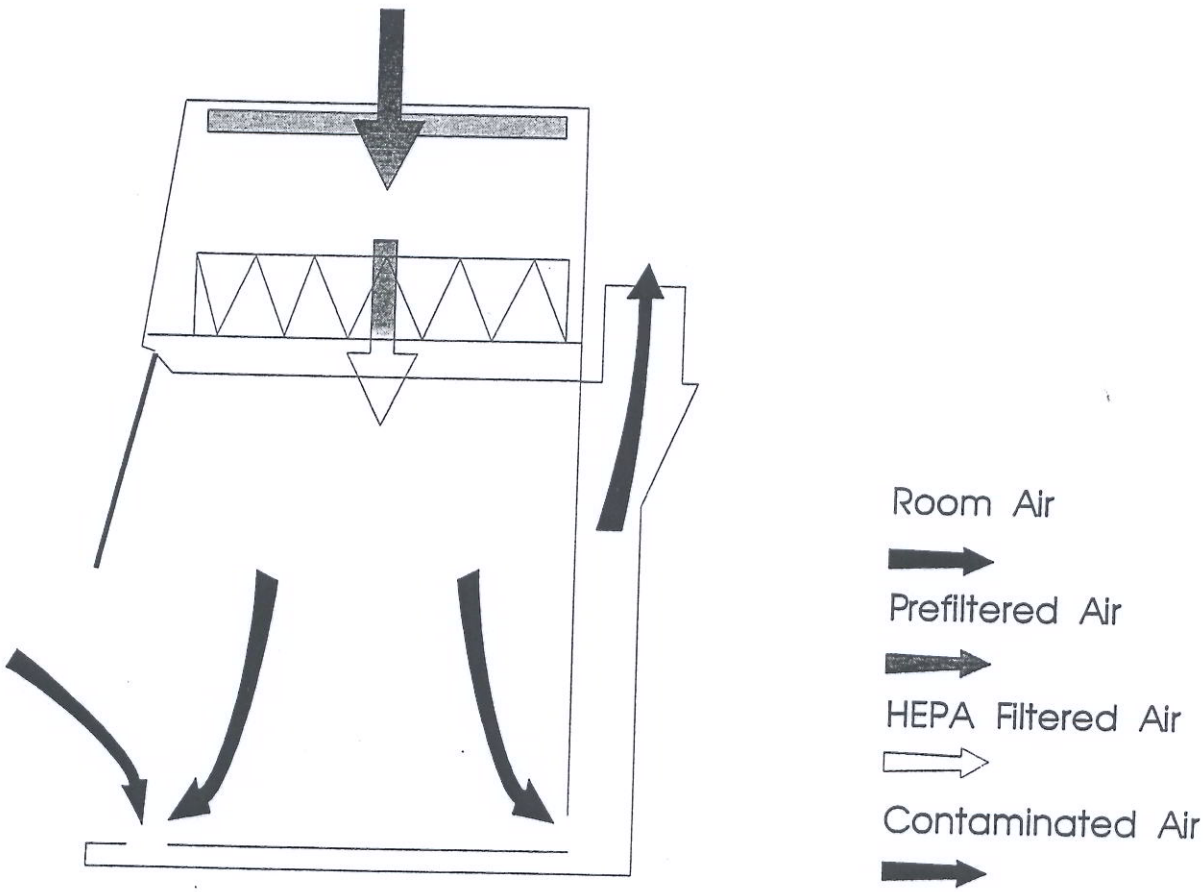

Figure 2

Component Identification (See Figure 3)

(1) **Speed Control.** The solid state speed control regulates the speed of the motorized impeller.

(2) **Blowers.** The unit is equipped with 2 variable speed blowers. The low wattage requirements of the permanent split capacitor (PSC) motor reduces operating costs.

(3) **Fluorescent Lamp.** The lamp is suspended above the work area, out of contact with the clean air.

(4) **Filter System Indicator.** The two light system indicates the pressure across the HEPA filter. During operation a 'normal' indicator light stays on. When the HEPA filter becomes excessively loaded, the 'SERVICE' light turns on, indicating the filter should be serviced.

(5) **Filter Clamping Device.** The clamping devices seal the HEPA filter to the frame of the Safety Enclosure. The devices are spring-loaded to compensate for filter gasket compression.

(6) **Sash.** The sash is constructed of 1/4 inch laminated safety glass. It pivots up to allow loading and unloading of tall items.

(7) **Control Panel.** The control panel which is located above the sash, contains the filter system indicator light and the control switches.

(8) **HEPA (High Efficiency Particulate Air) Filter.** The HEPA filter is rated to remove greater than 99.99% of all particles 0.3 micron.

(9) **Lamp Starter(s).** The lamp starters for the fluorescent lamp is located behind the control panel.

Component Identification

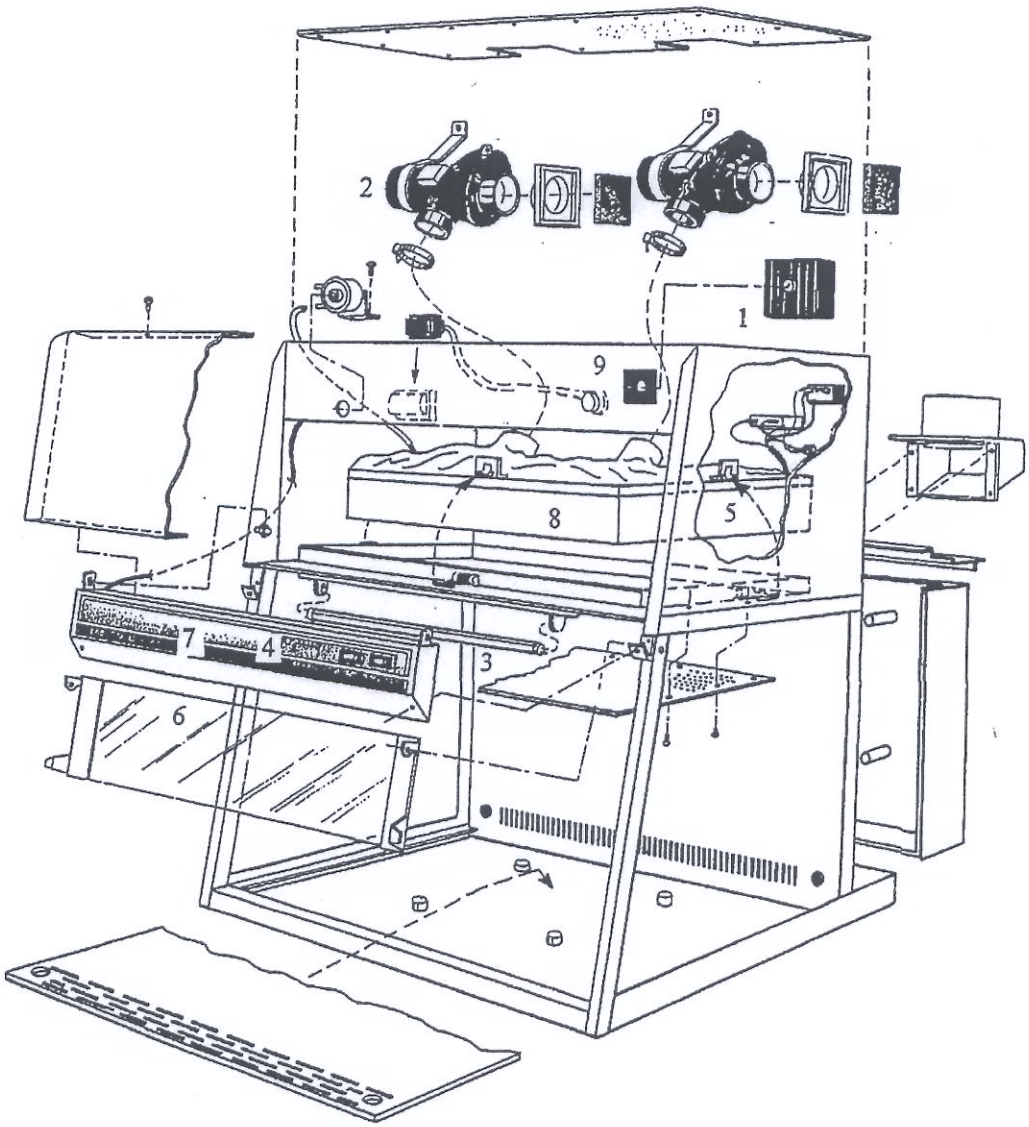

Figure 3

Preparation

DO NOT remove the Clean Bench from its carton until it is ready to be placed in its final location. Move the unit by placing a flat, low dolly under the shipping carton. DO NOT move the Clean Bench by tilting it onto a hand truck.

Location

The unit should be located away from traffic patterns and doors that could disrupt its airflow patterns. The Clean Bench should be located away from fans, heating and air conditioning registers, fume hoods, and any other air handling device. All windows in the room should remain closed. Figure 4 shows the optimum locations for the Purifier.

There should be a minimum clearance of 12" between the air inlets on the top of the enclosure and any overhead obstructions.

NEVER place items on top of the Enclosure. They may block or restrict the air intakes on the top of the cabinet, affecting performance.

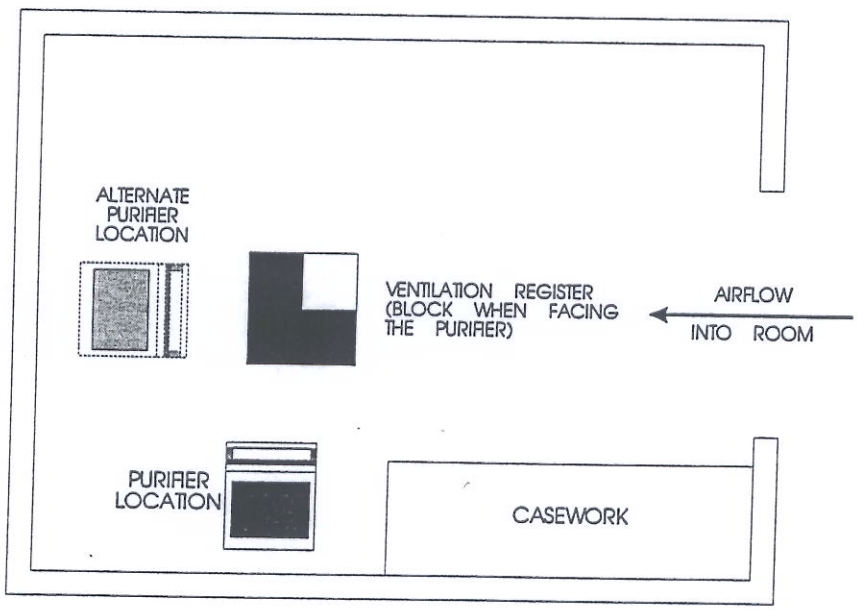

Figure 4

Exhaust Duct Connection

The exhaust duct connection for your Purifier needs to be connected to the back of the unit before installation. The connection, and its fasteners are enclosed in a box that is taped to the work surface. Place the connector on the back of the unit, and attach it using the six screws supplied. The unit is now ready to be connected to the exhaust system.

Exhaust System Connections

The cabinet's exhaust system should be dedicated to the Total Exhaust Purifier, be leak-free, and have a roof mounted blower and backdraft damper. The Blower should be correctly sized for the cabinet's requirements. Labconco recommends the use of the remote blower, catalog number 71804, for proper operation. See the 'Airflow Calculations' on page 33 for further information.

The exhaust connection on the Total Exhaust Purifier accepts standard 6 inch PVC duct. A typical exhaust system is shown in Figure 5.

Electrical Connections

Electrical requirements are as follows:

115 VAC Models:

37400-00 -01 & 37500-00 -01 all models 115 VAC, 5 Amp, 60 Hz

To connect the Enclosure to electrical service, plug the power cord into the power cord socket located on the right rear side of the enclosure rear panel, as shown in Figure 5.

NOTE: Always follow the plug manufacturer's instructions for the proper assembly and testing of the plug and power cord.

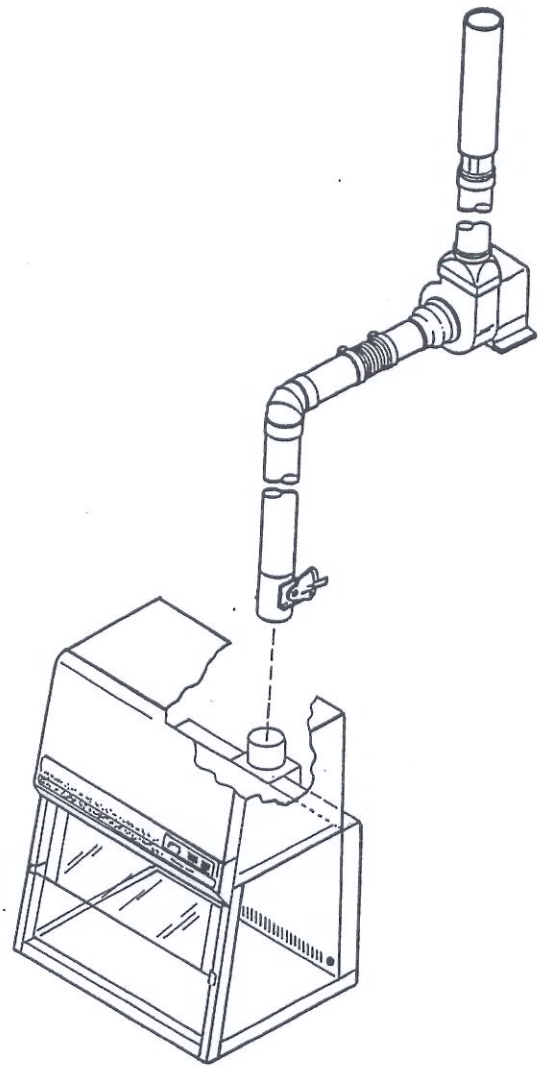

Figure 5

The Purifier Total Exhaust Clean Bench should be certified by a qualified certification technician before its initial use. The Clean Bench should be recertified whenever it is relocated, serviced, or at least annually thereafter.

Some components of the Purifier Total Exhaust Clean Bench should only be serviced by a qualified certification technician. Ensure that the unit is connected to electrical service in accordance with local and national electrical codes. Failure to do so may create a fire or electrical hazard. Do not remove or service any electrical components without first disconnecting the Purifier from electrical service.

Avoid the use of flammable gases or solvents in the Purifier. **Care must be taken to ensure against the concentration of flammable or explosive gases or vapors.** An open flame should **NOT** be used in the Purifier. Open flames may disrupt the airflow patterns in the Clean Bench. Gases under high pressure should not be used in the Purifier Clean Bench, as they may disrupt the airflow patterns.

The surface of the HEPA filter is fragile and should not be touched. Care must be taken to avoid puncturing the HEPA filter during installation or normal operation. If you suspect that the HEPA filter has been damaged **DO NOT** use the Clean Bench; contact a local certification agency or Labconco at 800-821-5525 for recertification information.

The HEPA filter in the Purifier Total Exhaust Clean Bench will gradually accumulate airborne particulate matter from the room. The rate of accumulation will depend upon the cleanliness of the room air, and the amount of time the Clean Bench is operating. In typical installations and usage, the HEPA filters will last two to five years before requiring replacement.

Proper operation of the Clean Bench depends largely on its location, and the operator's work habits. Consult the 'Installation' and 'Normal Operation' sections of this manual for further details.

Clean the interior surfaces of the Clean Bench with mild household detergent. **DO NOT** use abrasive cleaners, bleach, or solvents, as they may damage surfaces.

NEVER place items on top of the Clean Bench. they may block or restrict the intake opening on the top of the cabinet, affecting its performance.

When surface disinfecting the Purifier:

Avoid splashing the disinfecting solution on skin or clothing

Ensure adequate ventilation

Carefully follow the manufacturer's safety instructions when handling disinfectants and always dispose of disinfecting solutions in accordance with local and national laws.

WARNING: The Enclosure weighs over 70 lbs (33 Kg.). The carton allows for lifting with a mechanical lift truck or hand truck. If you must lift manually, have at least 2 people lift and follow safe lifting guidelines.

Prior to use, the Clean Bench should be certified by a qualified certification technician. Under normal operating conditions, the unit should be recertified at least annually or if serviced. The certifier should perform the following tests:

Exhaust Volume Test

Downflow Velocity Test

HEPA Filter Leak Test

In addition, the following tests should also be performed at the user's discretion.

Electrical Leakage and Ground Circuit Resistance Test

Measurement of Line Voltage and Current

Smoke Test to determine proper airflow patterns

Lighting Intensity Test (when appropriate)

Noise Level Test (when appropriate)

Vibration Test (when appropriate)

Starting The Clean Bench

To start the unit, turn the blower switch to the 'ON' position, as shown in Figure 6.

Reading the Filter System Indicator

The two light system located on the control panel as shown in Figure 6 indicates the pressure across the HEPA filter. During operation, a green 'NORMAL' indicator light stays on. When the HEPA filter becomes excessively loaded, the 'NORMAL' light turns off and the 'SERVICE' light turns on, indicating the unit should be serviced. A qualified certifier can then determine if the HEPA filter needs to be replaced.

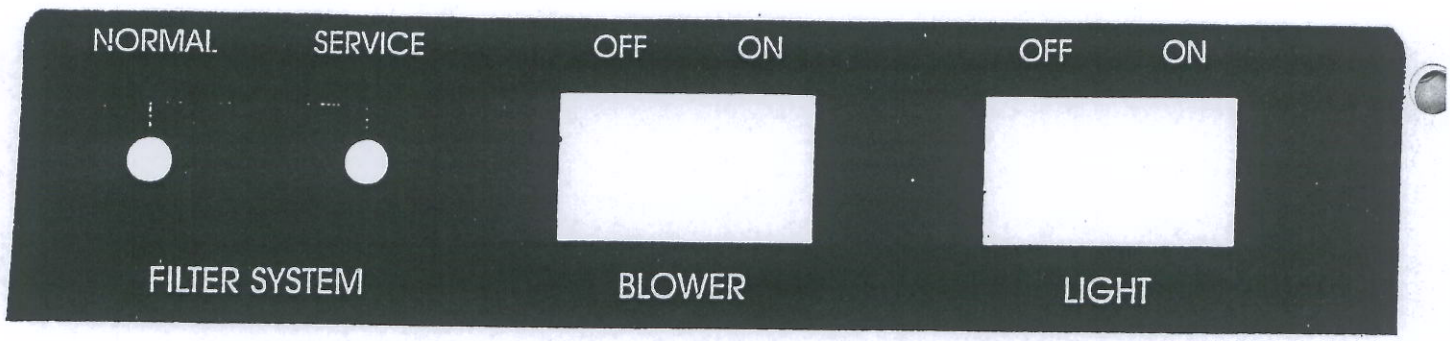

Figure 6

Use Of the Clean Bench

Planning

- Thoroughly understand procedures and equipment required before beginning work.
- Arrange for minimal disruptions, such as room traffic or entry into the room, while the Clean Bench is in use.

Start-up

- Turn on fluorescent light and Clean Bench blower.
- Check the prefilters for obstructions, and note the filter system indicator.
- Wipe down the interior surfaces of the Clean Bench with a mild household detergent, if needed. **DO NOT** use abrasive cleaners, bleach, or solvents, as they may damage the work surface of the Clean Bench.
- Allow the Clean Bench to operate unobstructed for 5 - 15 minutes.
- Wear a long sleeved lab coat with knit cuffs and over-the-cuff rubber gloves. Use protective eyeware.

Loading Materials and Equipment

- Only load the materials required for the procedure. Do not overload the Clean Bench.
- Do not obstruct the air diffuser.
- Large objects should not be placed close together.
- After loading the Clean Bench, wait 2-3 minutes to purge airborne contaminants from the work area.

Use Of The Clean Bench (Con't)

Work Techniques

- Keep all materials at least 4 inches inside of the Clean Bench, and perform all contaminated operations as far to the back of the work area as possible.
- Segregate all clean and contaminated materials in the work area.
- Arrange materials to minimize the movement of contaminated materials into clean areas.
- Keep all discarded contaminated material to the back of the Clean Bench.
- Avoid moving materials or the operator's hands and arms in and out of the work area during use.
- Avoid the use of an open flame.
- Use proper aseptic technique.
- Avoid using techniques or procedures that disrupt the airflow patterns of the Clean Bench.

Final Purging

- Upon completion of work, the Clean Bench should be allowed to operate for 2-3 minutes undisturbed, to purge airborne contaminants from the work area.

Wipe-Down

- Wipe down the interior surfaces of the Clean Bench with a mild household detergent or cleaner, and allow to dry.

Shutdown

- Turn off the fluorescent light and Clean Bench blower.

Under normal operation, your Purifier Total Exhaust Clean Bench will require little routine maintenance. The following schedule is recommended:

Weekly

- Wipe down the interior surfaces of the Clean Bench with a mild-household detergent or cleaner, and allow to dry.
- Using a damp cloth, clean the exterior surfaces of the Clean Bench, particularly the front and top of the Clean Bench, to remove any accumulated dust.

Monthly
(or more often as required)

- Check the Prefilters and replace if necessary. The prefilters should be replaced at least quarterly.
- All weekly activities.

Quarterly

- Replace the prefilters.
- All monthly activities.

Annually

- Have the Clean Bench recertified by a qualified certification technician.
- All quarterly activities.

Biannually

- Replace the fluorescent lamp if required.
- All annual activities.

HEPA FILTERS

The HEPA filter in the Purifier Total Exhaust Clean Bench will gradually accumulate airborne particulate matter from the room. The rate of accumulation will depend upon the cleanliness of the room air, the amount of time the unit is operating. In typical installations and usage, the HEPA filters will last two to five years before requiring replacement.

To determine if the HEPA filter should be replaced, a qualified certifier should adjust the speed control at its maximum setting. If the average downflow, as calculated on page 32, is less than needed, the filter should be replaced.

The HEPA filter for the Series 37500 Clean Bench is Labconco part #37079-01, and measures 30" x 18" x 3 3/16".

Under normal operating conditions, the Total Exhaust Clean Bench should be recertified at least annually or if serviced. The certifier should perform the following tests.

- Exhaust Volume Test
- Downflow Velocity Test
- HEPA Filter Leak Test

In addition, the following tests should also be performed at the user's discretion:

- Electrical Leakage and Ground Circuit Resistance Test
- Measurement of Line Voltage and Current
- Smoke Test to determine proper airflow patterns
- Lighting Intensity Test (when appropriate)
- Noise Level Test (when appropriate)
- Vibration Test (when appropriate)

Changing The Prefilters

The Prefilters should be replaced at least quarterly, or more often, as conditions require.

(1) Carefully lift the prefilter element straight up and out of the Clean Bench.

(2) Install a new prefilter element by pressing it into position in the Clean Bench.

The prefilters for the Purifier Total Exhaust Clean Bench is Labconco part #3727500.

Sash Adjustment

Rotate the sash to its up position by pulling the sash tabs or the lower edge of the sash away from the front of the unit, and holding it in an open position. Pull out the sash prop located on the left inside frame to support the sash in an open position.

Dress Panel Removal

(1) Locate the front dress panel, just above the control panel. Remove the two screws located on the top of the panel. Remove the panel by pulling it slightly upward and out, as shown in Figure 7.

Fluorescent Lamp Removal

(1) Remove the front dress panel as described above.

(2) Locate the control panel on the front of the cabinet, which has the filter indicator lights and switches. Remove the screws located on each lower end of the panel. Swing the panel upward for access to the fluorescent lamp as shown in Figure 7.

(3) Remove the fluorescent lamp by rotating the lamp and pulling it straight out of its sockets.

(4) Install the new lamp by reversing the removal procedure.

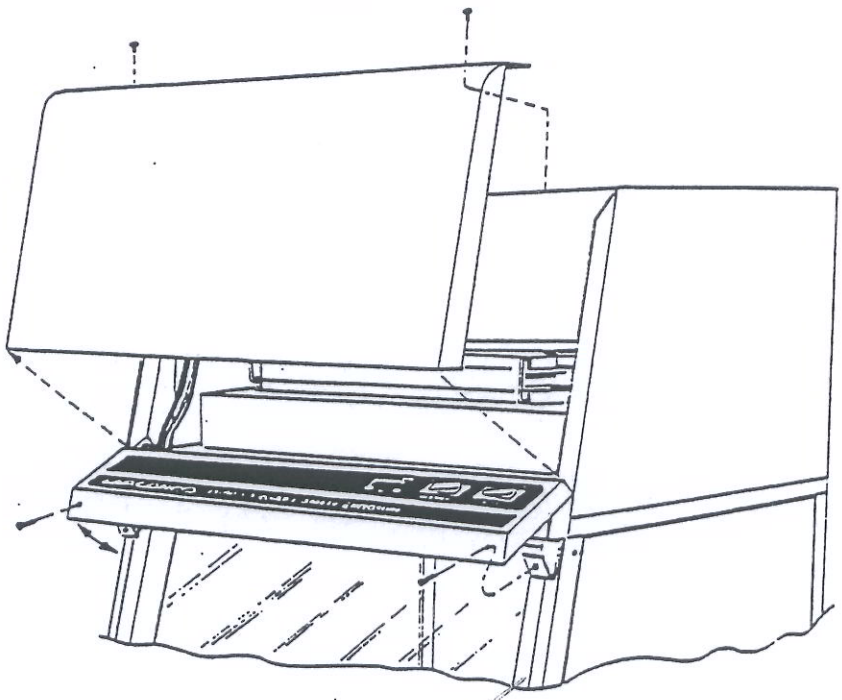

Figure 7

Changing a Lamp Starter

NOTE: The fluorescent lighting system utilizes a starter (preheat) style lighting system.

NOTE: One replacement starter has been included with the unit in the instruction manual package.

(1) Unplug the Clean Bench.

(2) Remove the top cover panel by removing the screws around its perimeter.

(3) The starter is located on the inside of the front panel, above the HEPA filter. Remove the starter from the module by depressing and twisting counterclockwise approximately 1/8 turn. Pull the starter straight out of the plug and replace with an FS-2 type starter only.

(4) Reassemble the cabinet and plug it in.

Speed Control Adjustment

> **NOTE**: The speed control should only be adjusted by a qualified certifier.

(1) Remove the front dress panel as described on page 21.

(2) Adjust the speed control as required by turning the screw counterclockwise to increase blower speed, or clockwise, to decrease the blower speed.

(3) Replace the front dress panel, and re-establish the inflow air velocity.



Figure 8

Filter Indicator System Adjustment

To adjust the filter indicator light system, remove the front dress panel as described on page 21, and follow the instructions on the decal located on the left side of the unit.

HEPA Filter Replacement

NOTE: After the HEPA filter is replaced, the unit MUST be certified.

(1) Unplug the cabinet.

(2) Remove the front dress panel as described on page 21.

(3) Remove the cover panel and let it hang down.

(4) Remove the filter clamps surrounding the HEPA filter.

(5) Disconnect the back clamps securing the blower duct to the blower outlet.

(6) With the clamp bolts loosened, the supply filter clamping frame should be clear of the filter. Carefully pull the filter assembly straight out of the unit and discard properly.

(7) With the filter removed, inspect the clamping frame and the frame of the cabinet for damage.

(8) Cover the surface of the new HEPA filter gasket with a light coating of silicone grease if desired.

(9) Install the new HEPA filter by pushing it straight into the cabinet, ensuring that it is correctly oriented and the filter fits properly in the cabinet.

(10) Reassemble the unit by reversing the disassembly process.

(11) Plug the cabinet in and have it recertified before use.

HEPA Filter Leak Test

> **NOTE:** Use a Laskin nozzle type generator. **DO NOT** use more than 1 nozzle operating at 20 PSIG. If 1 nozzle at 20 PSIG generates excess aerosol, reduce the pressure on the nozzle to 5-10 PSIG.

1. Remove the Clean Bench prefilter, diffuser and the front dress panel as described on page 21.
2. Place the aerosol generator discharge near the air intakes of the unit.
3. Turn the Clean Bench on and let it operate for several minutes to stabilize.
4. Start the aerosol generator. Ensure that only one nozzle is open and the generator is operating at 5-20 PSIG.
5. Connect the photometer pickup to the filter indicator tube, located on the HEPA filter duct. The air discharged from this hole should be sampled and the photometer calibrated, using the manufacturer's instructions to read 100% transmission.
6. Using the photometer pickup, scan the edges and surface of the HEPA filter. Use the methodology recommended in the Institute for Environmental Sciences Recommended Practice IES-RP-CC-002-86.
7. The average concentration on the downstream (clean) side of the filter should be 0.01% or less.
8. Reinstall the diffuser and prefilters.

Exhaust Volume Test Procedure

> **NOTE:** Adjusting the exhaust volume will have an impact on the performance of the Purifier. Measuring and adjusting of the exhaust volume should only be done by a qualified certifier.

The exhaust volume of the unit must be established in order to ensure a proper inflow volume. After the average downflow velocity is established as close to 65 FPM as possible, the Exhaust Volume can be calculated.

Acceptance

Set the exhaust damper (not supplied) so that the exhaust volume is 488 ± 10 CFM, measured in accordance with the American Society of Heating, Refrigeration and Air Conditioning Engineers (ASHRAE) methods for air velocity measurements in ducting. Lock the damper in its setting after establishing the correct exhaust volume.

With a total exhaust volume of 488 CFM, and an average downflow velocity of 60 FPM, the average inflow velocity will be 80 FPM.

Blower Replacement

The blower should only be serviced by a qualified certifier. Use caution during the removal of the blower. The blower is a non-serviceable component, and must be replaced as a unit. When the blower is replaced, a new capacitor should be installed. Following replacement of the blower, the Clean Bench must be recertified by a qualified certifier.

1. Unplug the Clean Bench.
2. Remove the top cover by removing all of the screws located on the top of the unit. **NOTE: DO NOT** remove the two screws that hold the front dress panel in place.
3. Disconnect the blower outlet connection by loosening the back clamp that secures it.
4. Disconnect the blower wiring from the wiring harness.
5. Remove the blower by loosening the blower mount clamp bolt until the assembly can be removed.
6. Reassemble the unit by reversing the disassembly steps. Recertify the unit.

Calculating Average Downflow Velocity

The downflow velocity of the Purifier should be measured in a plane 6" below the diffuser. A boundary of 6" should be established on the sides and rear of the work area, and readings should be taken at the boundary edges, at intervals of approximately 6". This would yield a test grid of three rows from back to front, with 5 columns of test points (15 test points total).

Acceptance

Average of the measurements must fall in the range of 60 ± 10 FPM. The intent is to adjust the speed control to give as close to 60 FPM as practical. The motor must start with ease from a dead stop. If the motor will not start, the speed control setting must be increased.

Calculating Supply Air Volume

The supply volume is calculated by multiplying the average downflow times the area of the plane where the readings are taken. with a nominal average downflow velocity of 60 FPM x a depth of 1.83 Ft. by a width of 2.88 Ft., we obtain a nominal supply volume of 316 CFM.

Calculating Average Inflow Velocity

NOTE: Because of the inlet grille and sash design, it is impossible to establish the the average inflow by measuring the face velocity at the work access opening below the sash. DO NOT attempt to calculate average inflow by placing a velometer below the bottom of the sash; this procedure will yield an inaccurate result. Average inflow velocity can only be calculated by subtracting the supply volume from the total exhaust volume. This procedure is discussed in depth on page 32, Airflow Data Table.

Storage

If the Purifier is to be left unused for more than 1 month, the unit should be prepared for storage.

(1) Surface disinfect or decontaminate the cabinet as required.

(2) Unplug the unit

(3) Cover and seal the work area access opening and the inlet opening with plastic sheeting.

(4) Ensure that the cabinet will not be moved or disturbed while in storage.

NOTE: The cabinet should not be stored in excessive humidity or temperature extremes. If the cabinet is moved during storage it must be recertified before use.

Ref. No.	Quantity	Catalog No.	Description
1	1	1327204	Circuit Breaker, 5 Amp
2	1	3704400	Speed Control Assembly, 115 VAC
3	2	1302300	Switch - 2 position
4	1	1271800	Starter - #FS-2
5	1	1271700	Lamp, 30 Inch Fluorescent (FT8)
6	1	3725900	HEPA Filter, 3 foot units
7	2	3726900	Blowers
8	2	~~3718001~~ 3727500	Prefilter

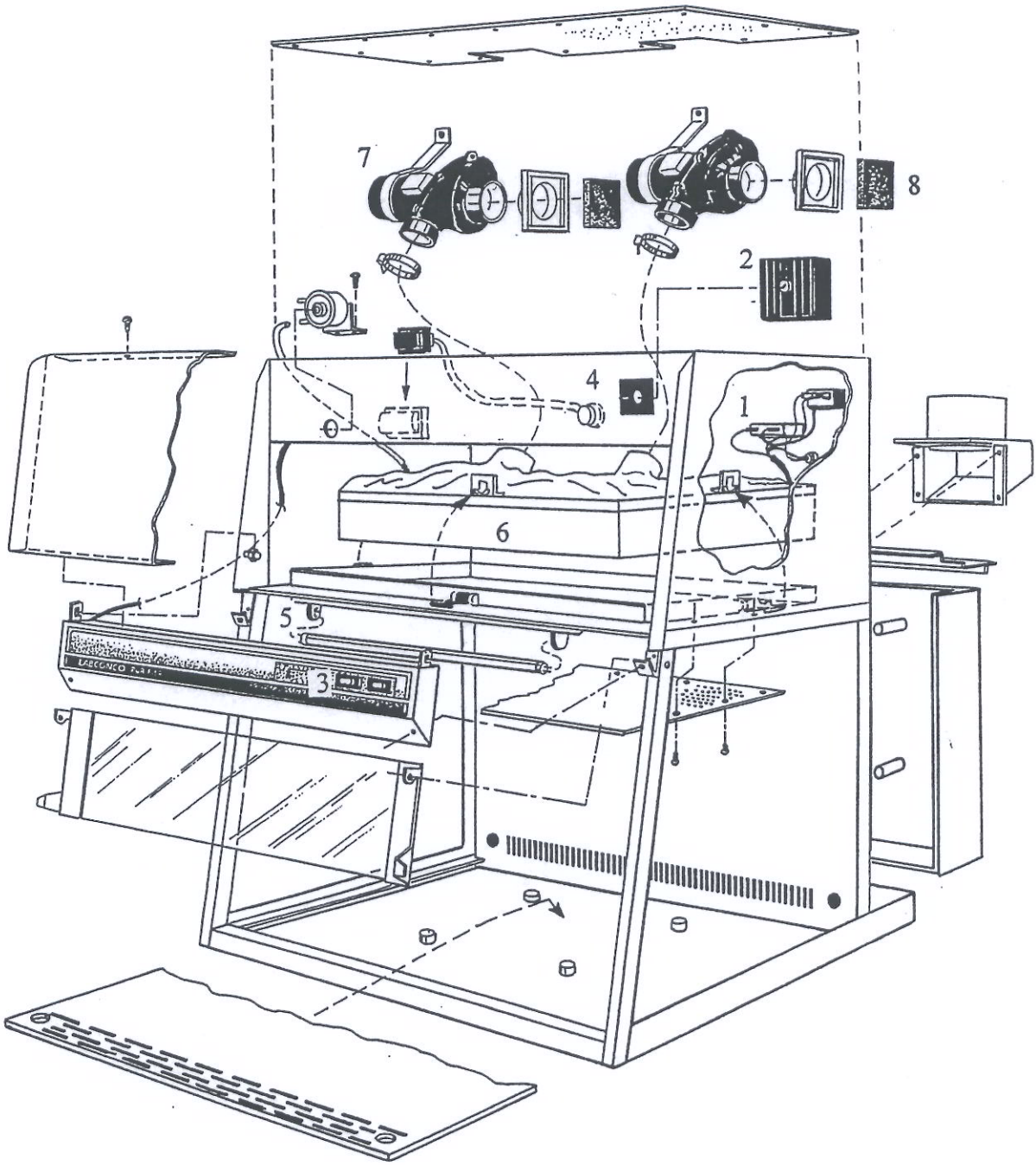

Figure 10

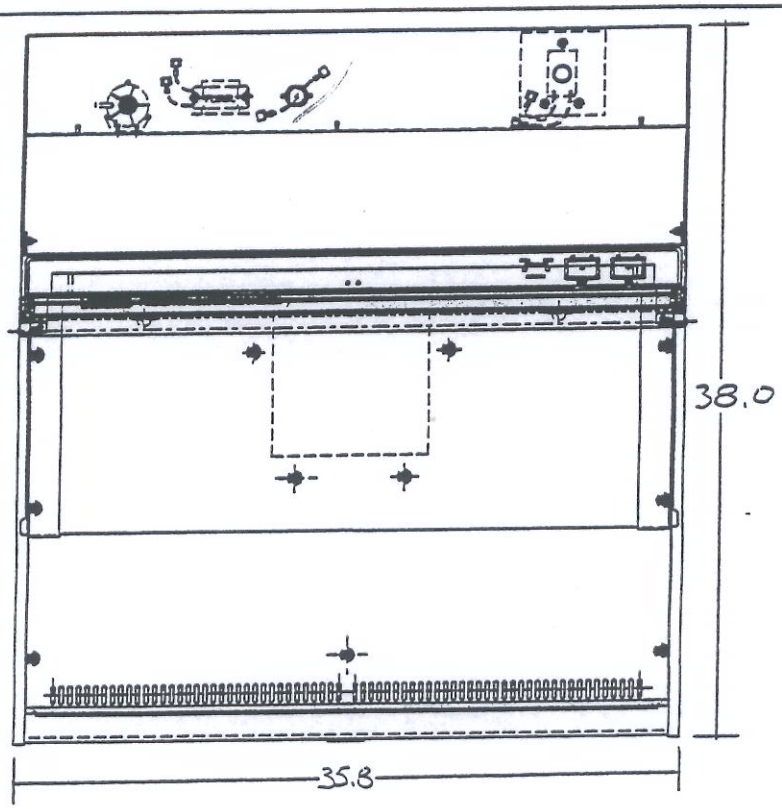

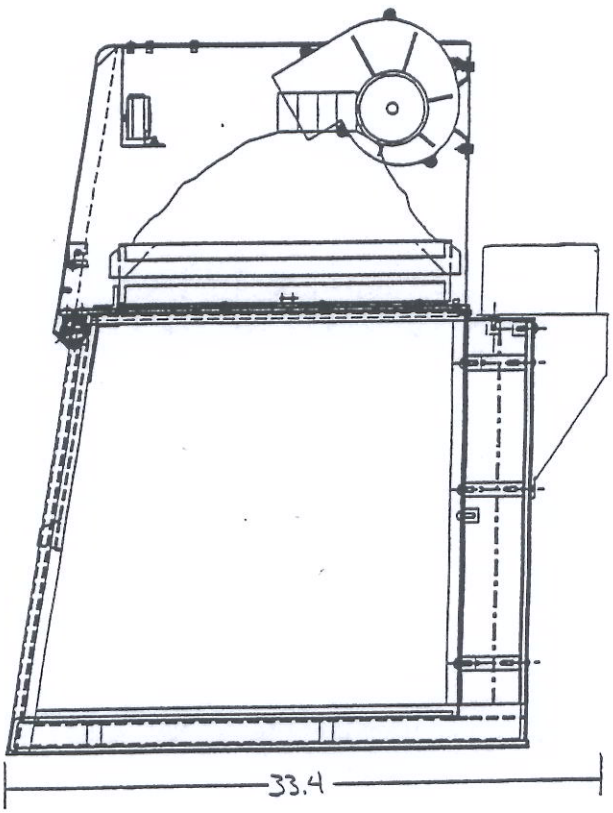

Figure 11

CABINET MODEL	ELECTRICAL REQUIREMENTS
37500-03	115 VAC - 60 Hz 1 Phase - 2.5 Amp

MOTOR SPECIFICATIONS

MODELS 37500-03 (2 each)

115 VAC 60 Hz
1/7th HP

ENVIRONMENTAL CONDITIONS

The Purifier Enclosure is designed to operate under the following conditions:

- indoor use;
- altitude up to 2000 m;
- temperature 5°C to 40°C;
- maximum relative humidity 80% for temperatures up to 31°C decreasing linearly to 50% relative humidity at 40°C;
- mains supply voltage fluctuations not to exceed ± 10% of the nominal voltage;
- transient overvoltages according to Installation Category II (overvoltage categories per IEC 1010);
- pollution Degree 2 in accordance with IEC 464.

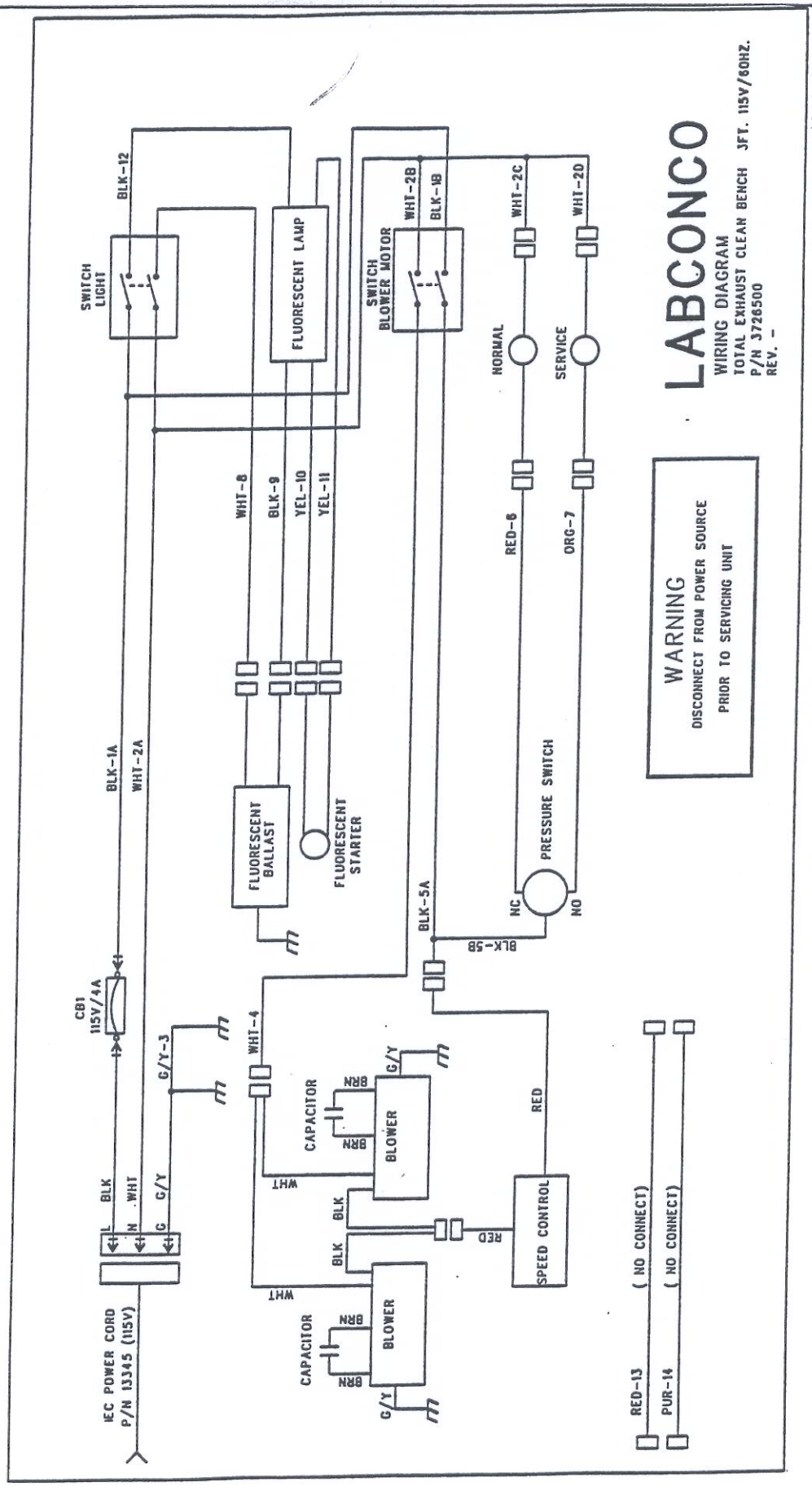
LABCONCO
WIRING DIAGRAM
TOTAL EXHAUST CLEAN BENCH 3FT. 115V/60HZ.
P/N 3726500
REV. -
WARNING
DISCONNECT FROM POWER SOURCE
PRIOR TO SERVICING UNIT
SWITCH LIGHT
FLUORESCENT LAMP
SWITCH BLOWER MOTOR
NORMAL
SERVICE
PRESSURE SWITCH
NC
NO
FLUORESCENT BALLAST
FLUORESCENT STARTER
CB1 115V/4A
IEC POWER CORD P/N 13345 (115V)
CAPACITOR
BLOWER
SPEED CONTROL
(NO CONNECT)
(NO CONNECT)
BLK-12
BLK-1A
WHT-2A
WHT-8
BLK-9
YEL-10
YEL-11
WHT-2B
BLK-1B
WHT-2C
WHT-2D
RED-6
ORG-7
BLK-5A
BLK-5B
WHT-4
G/Y-3
RED-13
PUR-14
BLK
WHT
G/Y
BRN
RED

In order to assure proper operation of the Purifier Total Exhaust Vertical Clean Bench, both the average downflow and average inflow velocities must be established and adjusted to the specification stated below.

NOTE: Because of the inlet grille and sash design, it is impossible to establish the average inflow by measuring the face velocity at the work access opening below the sash. DO NOT attempt to calculate average inflow by placing a velometer below the bottom of the sash; this procedure will yield an inaccurate result. Average inflow velocity can only be calculated by subtracting the Supply Volume from the Total Exhaust Volume.

In order to establish the correct airflow values follow this procedure:

1. Establish the Average Downflow Velocity and adjust it if necessary (The nominal setpoint is 60±/5 FPM).
2. Calculate the Supply Air Volume by multiplying the Average Downflow Velocity by the area of the plane in which the readings are taken. With an average down-flow velocity of 60 FPM, this calculation would be:

   60 FPM x 1.83 Ft. (depth) x 2.88 Ft. (width) = 316 CFM, the nominal supply volume

3. Establish the Exhaust Volume and adjust it if necessary (The nominal setpoint is 488±/10 CFM).
4. Substract the Supply Volume from the Exhaust Volume to yield the Inflow Volume:

   488 CFM -316 CFM - 172 CFM.

5. Establish the Average Inflow Velocity by dividing the Inflow Volume by the area of the work opening:

   172 CFM / (2.88 Ft. (width) x .75 Ft. (height) = 80 FPM.

Downflow readings should average 60 ± 10 FPM. For more demanding environments, the downflow can be increased to 70 ± 10 FPM.

If you have any questions regarding certification of your Purifier, please contact Labconco's Product Service Department at 1-(800) 821-5525 between the hours of 7:00 AM - 6:00 PM CST.

PROBLEM	CAUSES	CORRECTIVE ACTION
Cabinet blower and lights won't turn on.	Unit not plugged into outlet	Plug the Purifier into appropriate electrical service
	Circuit breaker(s) tripped	Reset circuit breaker(s)
Blowers won't turn on but lights work	Blower is disconnected	Inspect blower wiring
	Blower switch is defective	Replace blower switch
	Blower is defective	Replace blower
Cabinet impeller turns on but lights don't work	Lamp not installed correctly	Inspect lamp installation
	Lamp wiring is disconnected	Inspect lamp wiring
	Defective lamp starter	Replace lamp starter
	Lamp is defective	Replace lamp
	Lamp switch is defective	Replace lamp switch
	Defective lamp ballast	Replace lamp ballast
'Service' Light is on	Blockage of the intake	Check the intake on top of the unit to ensure it is not blocked or restricted
	Prefilters loading	Replace prefilters
	HEPA filter loading	The light will turn on when the filter is loaded

Many excellent reference texts and booklets are currently available. The following is a brief listing:

Bryan, D., and R.C. Marback. 1984. Laminar-airflow equipment certification: What the pharmacist needs to know. American Journal of Hospital Pharmacy. 41.1343-1348.

General Services Administration. 1988. FED-STD-209E Federal Standard - Clean Room and Work Station Requirements, Controlled Environment. Washington, D.C.

IES Recommended Practice: IES-RP-CC-001-86. Recommended Practice for HEPA Filters. Mt. Prospect, IL: Institute for Environmental Sciences. 1986.

IES Recommended Practice: IES-RP-CC-002-96. Laminar Flow Clean Air Devices. Mt. Prospect, IL: Institute for Environmental Sciences. 1986.

IES Document: IES-CC-011-85-T. A Glossary of Terms and Definitions Related to Contamination Control. Mt. Prospect, IL: Institute for Environmental Sciences. 1985.

OPERATING RECORD LOG

Customer Name_____ Model Number_____

Date Installed_____ Serial Number_____

Unit Location_____

Date	Comments

We are committed to providing our customers with quality equipment and service after the sale. Part of this objective involves keeping you informed of changes and new product additions. We therefore request that you take a moment to fill out the product registration card so we may know your location as well as some of the reasons that prompted you to purchase our products.

Labconco Corporation warrants products of its manufacture for one year, from receipt of the equipment by the purchaser, against defects in materials and workmanship. This limited warranty covers parts and labor but not transportation and insurance charges. In the event of a warranty claim contact the dealer who sold you the product. If the cause is determined to be a manufacturing fault, the dealer or Labconco Corporation will repair or replace all defective parts to restore the unit to operation. **Under no circumstance shall Labconco Corporation be liable for indirect, consequential or special damages of any kind.** This statement of warranty may be altered by a specific published amendment. No individual has authorization to alter provisions of this warranty policy or its amendments. Lamps and expendable items such as filters are not covered by this warranty. Damage due to corrosion or accidental breakage are also not covered.

WARNING: The disposal and/or emission of substances used in connection with this equipment may be governed by various federal, state or local regulations. All users of this equipment are urged to become familiar with any regulations that apply in the user's area concerning the dumping of waste materials in or upon water, land or air and to comply with such regulations.

SHIPPING CLAIMS

If shipment is received in visibly damaged condition, be certain to make a notation on the delivering carrier's receipt and have his agent confirm the damage on your receipt. Otherwise, the damage claim may be refused.

If concealed damage or pilferage is discovered, notify the carrier immediately and retain the entire shipment intact for inspection. Interstate Commerce Commission rules require that the claim be filed with the carrier within 15 days after delivery.

NOTE: Do not return goods. Goods returned without prior authorization will not be accepted. Labconco Corporation and its dealers are not responsible for shipping damage. Claims must be filed directly with the freight carrier by the recipient. If authorization has been received to return this product, by accepting this approval, the user assumes all responsibility and liability for biological and chemical decontamination and cleansing. Labconco reserves the right to refuse delivery of any products which do not appear to have been properly cleaned and/or decontaminated prior to return.

If you have any questions that are not addressed in this manual, or if you need technical assistance, please contact Labconco's Sales Information Department at 800- 821-5525, and Service Information at 800-522-7658 or (816) 333-8811, between the hours of 7:00 a.m. and 6:00 p.m. Central Standard Time.

You can visit Labconco through the Internet at:

http://www.labconco.com

or

email: labconco@labconco.com

If you need emergency assistance at any other time, contact Labconco at (800) 821-5525 and wait for instructions on how to contact one of our Product Service Technicians.