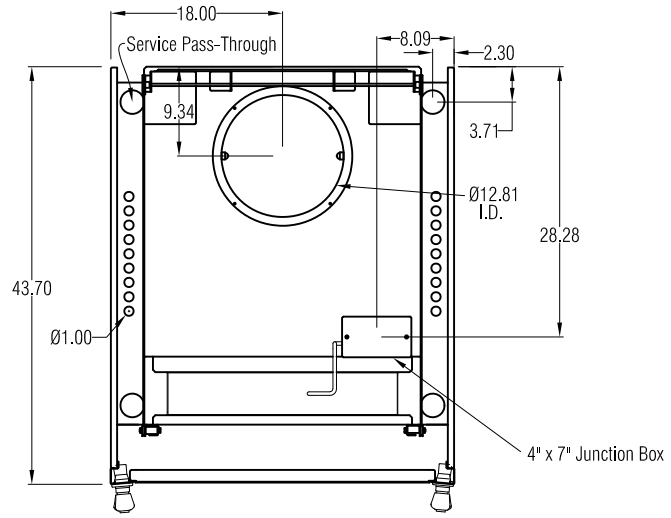

TOP VIEW

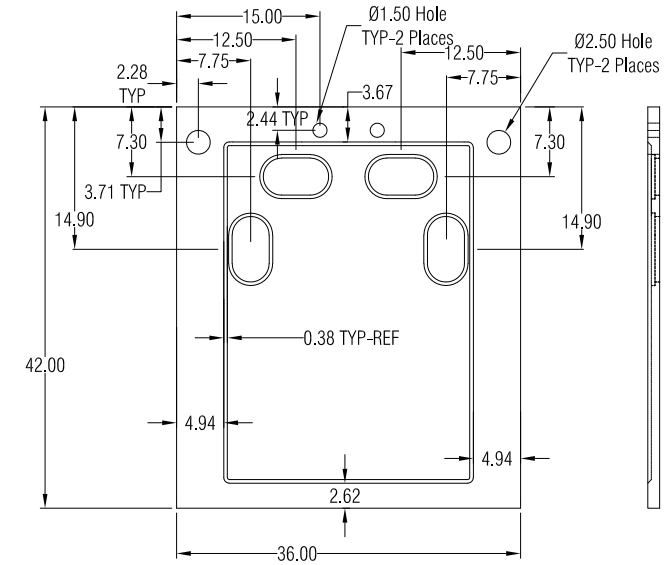

WORK SURFACE (Sold Separately) 95023-XX (See General Description for XX value)
Model number varies based on sink location selection

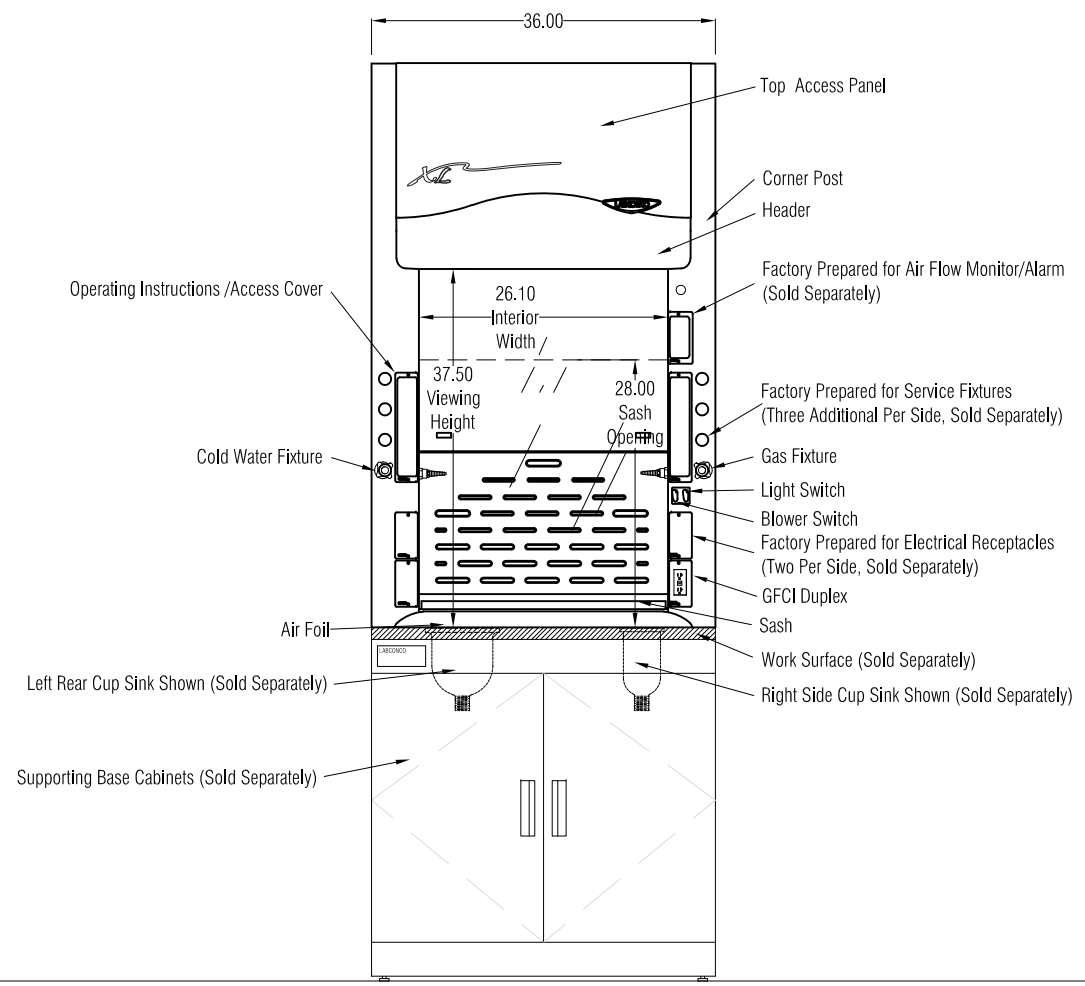

FRONT VIEW

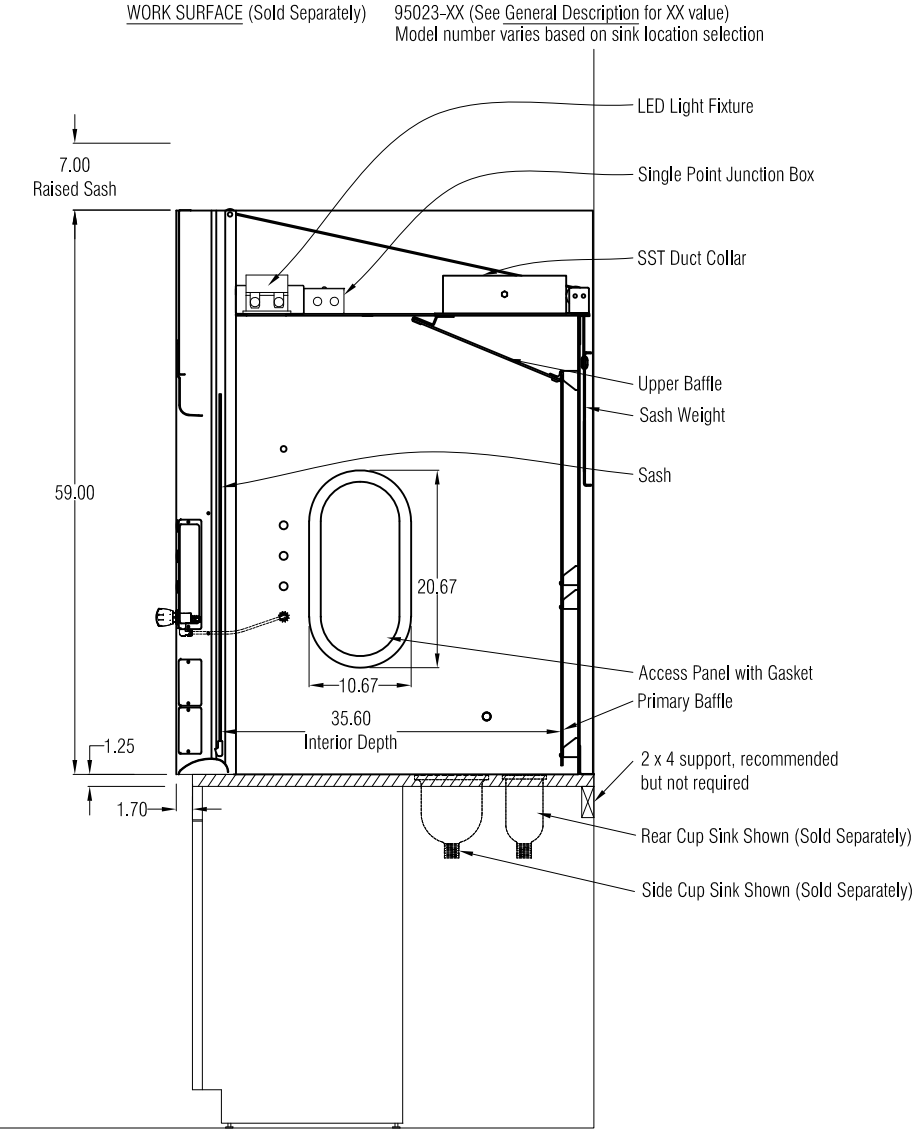

SIDE VIEW

GENERAL DESCRIPTION

3' Protector XL Laboratory Hood, 43.7" Exterior
Model: 111320002

Exterior Superstructure
* Double Wall Construction * Cold Rolled Steel

Interior Superstructure
* Galvanized Steel (standard)

Left / Right Facia:
* Powder Coated Steel * Color: Glacier White

Liner Material
* Molded Composite Sheet

Side Panels
* Both Sides * Removable * Color: Glacier White

Baffles
* Molded Composite Sheet

Interior Access Panels
* Right and Left Sides
* Gasket Provided

Corner Post with Access Covers
* Right and Left Sides
* Cold Rolled Steel

Air Foil
* Cold Rolled Steel * Powder Coat Finish

Sash
* Vertical Travel
* Tempered Safety Glass
* Counter Weighted and Balanced
* Pulley System

Electrical Fixtures
* LED Light and Tubes w/ Switch
* Duplex, 115VAC / 60HZ / 20A/ GFCI

Alarm / Monitor (Sold Separately)
* Factory Prepared for Air Flow Monitor/Alarm

Wiring
* Fume Hood Wired at Factory
* Electrical Connection made inside 4x7 Junction Box
* 100–115V, 50/60 Hz

Service Fixtures
* Labconco * Color–Coded Hooded Handle * Front Loading
* Parts included to convert standard fixtures to Vacuum or Air

Symbol	Service	Color
CW	Cold Water	Green
Gas	Gas	Blue
Air	Compressed Air	Orange
Vac	Vacuum	Yellow

Plumbing
* Connections Made with Swagelock Compression Fittings
* Final connection by others
* Pre–Piped to Valve Outlet
* Standard Water Piping is 1/4" Copper Tubing
* Air and Vac Piping is 1/4" Copper Tubing
* Standard Gas Piping is 1/4" Brass Tubing

Work Surface (Sold Separately)
* Black Epoxy Work Surface, Model 95023–XX (See below for XX)
  * # 00 – No cup sink cutouts
  * # 01 – Cup sink cutout right rear location
  * # 02 – Cup sink cutout right side location
  * # 10 – Cup sink cutout left rear location
  * # 20 – Cup sink cutout left side location
  * # 11 – Cup sink cutouts left and right rear locations
  * # 22 – Cup sink cutouts left and right side locations

Cup Sink (Sold Separately)
* Black Oval Polypropylene Cupsink, 3" x 6", # 4005200

Required Accessories (Sold Separately)
* Remote Blower
* Supporting Base

	Airflow Volumetric Rate (CFM) @ Static Pressure (inches of water)	
Face Velocity (fpm)	100% open (28")	62.5% open (18")
100	495 @ 0.13"	310 @ 0.05"
80	395 @ 0.08"	250 @ 0.03"
60	295 @ 0.05"	185 @ 0.02"

Assembly and Crating
* Pre–Assembled
* Palletized

SCALE: Scaled to fit

FUME HOODS for:

LABCONCO®

LABCONCO CORPORATION • KANSAS CITY MO USA 64132
800-821-5525 / 816-333-8811 • labconco.com

Rev	Date

Date: June 2023

Drawing # 111320002

Drawn By: C. Alumbaugh

Checked By:

Approved By:

Sheet No.