2 & 3 Foot Purifier®
Vertical Clean Benches

INSTRUCTION MANUAL

Models 37400-00, 37400-01, 37400-20, 37400-21
Models 37500-00, 37500-01, 37500-20, 37500-21

Product designs are subject to change without notice
© 2002 Labconco Corporation
37182 Revision F / ECO A178
Printed in U.S.A.

TABLE OF CONTENTS

Introduction

Components Shipped 1
General Description 2
Performance 3
Component Identification 4

Installation

Preparation 6
Location 6
Installing the Purifier Clean Bench on the Work Surface 7
Installing the Clean Bench on the Universal Base Stand 7
Electrical Connections 8

Safety Precautions 9

Initial Certification 11

Normal Operation

Starting the Clean Bench 12
Reading the Filter System Indicator 12
Use of the Clean Bench 13

Routine Maintenance 15

HEPA Filters 16

Re-certification 17

Customer Service Operations

Changing the Prefilter 18
Sash Adjustment 19
Dress Panel Removal 19
Fluorescent Lamp Removal 19
Changing a Lamp Starter 20
Changing the UV Lamp 20

Certifier Service Procedures

Speed Control Adjustment 21
Filter Indicator System Adjustment 21
HEPA Filter Replacement 22
HEPA Filter Leak Test 24

Motorized Impeller Replacement 24
Air Velocity Test..... 25

Storage 25

Replacement Parts..... 26

Cabinet Dimensions..... 28

Electrical Data Table..... 29

Wiring Diagram..... 30

Airflow Data Table 31

Troubleshooting..... 32

References 33

Operating Record Log..... 34

Warranty..... 35

Shipping Claims..... 36

Accessories 37

Contacting Labconco 38

Components Shipped

Carefully check the contents of the carton for damage that might have occurred in transit. Do not discard the carton or packaging material until all components have been checked against the following component list and the equipment has been installed and tested.

As shipped, the carton should contain the following:

Part Number	**Description**
37400-00	2 Foot Purifier Vertical Clean Bench
37400-01	2 Foot Purifier Vertical Clean Bench with UV light
37400-20	2 Foot Purifier Vertical Clean Bench, 230V
37400-21	2 Foot Purifier Vertical Clean Bench with UV light, 230V
37500-00	3 Foot Purifier Vertical Clean Bench
37500-01	3 Foot Purifier Vertical Clean Bench with UV light
37500-20	3 Foot Purifier Vertical Clean Bench, 230V
37500-21	3 Foot Purifier Vertical Clean Bench with UV light, 230V
37182-00	Instruction Manual

INTRODUCTION

General Description

The Labconco Purifier® Vertical Clean Bench is a HEPA (High Efficiency Particulate Air) filtered ventilated enclosure designed to provide product protection from airborne particulate matter. Each Clean Bench uses a single HEPA filter, which has been tested at the factory to be at least 99.99% efficient for particles 0.3 micron.

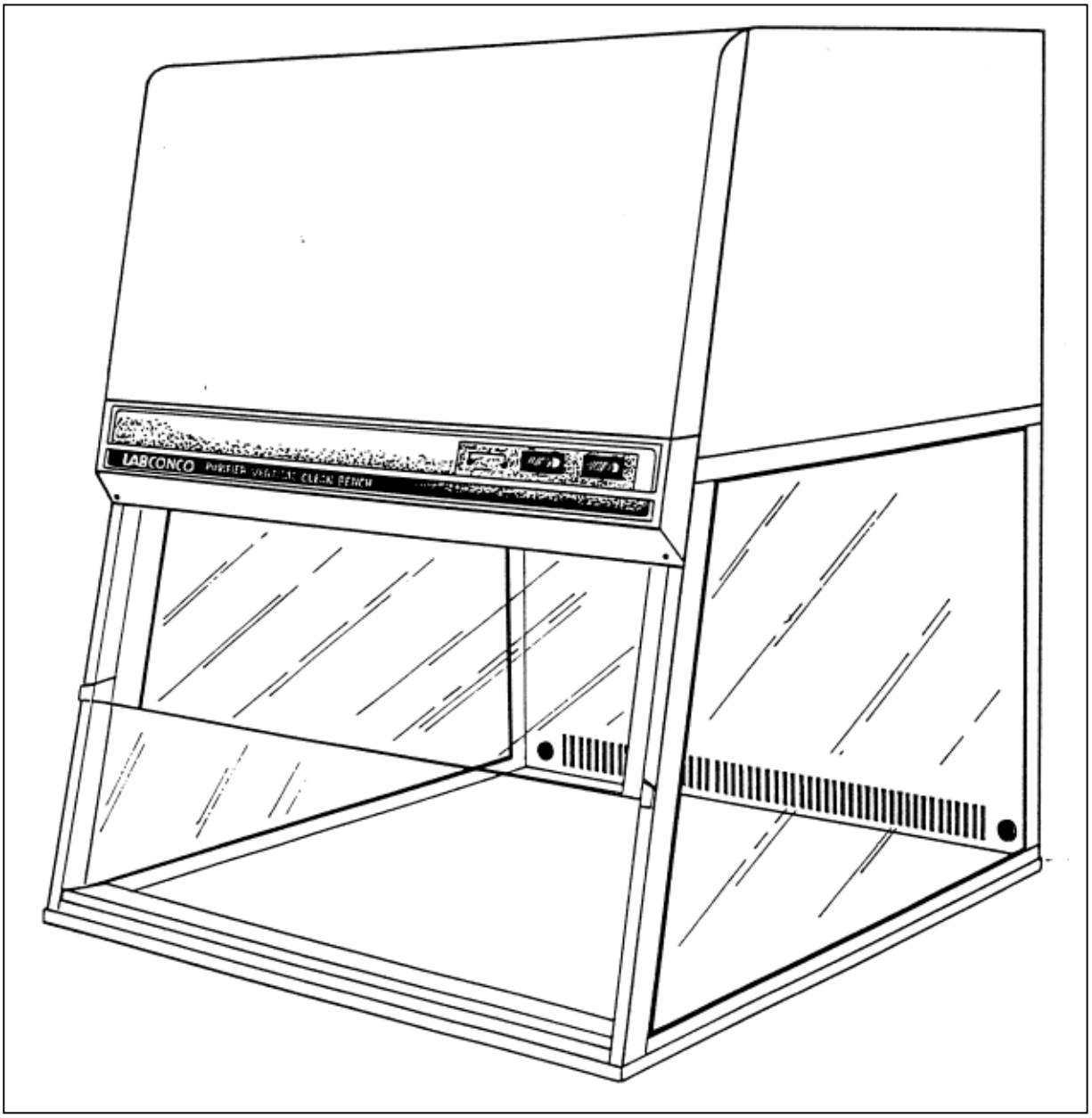

Figure 1

Performance

During operation, room air is drawn through the prefilter on the top of the Vertical Clean Bench. The motor/blower(s) force this prefiltered air into the HEPA filter, and the velocity of the HEPA filtered air is stabilized by a diffuser located at the top of the work area.

The clean air in the work area meets or exceed Class 100 conditions as defined by Federal Standard 209E, and the motor/blower speed control is factory set to deliver an average nominal airflow of 60-80 feet per minute.

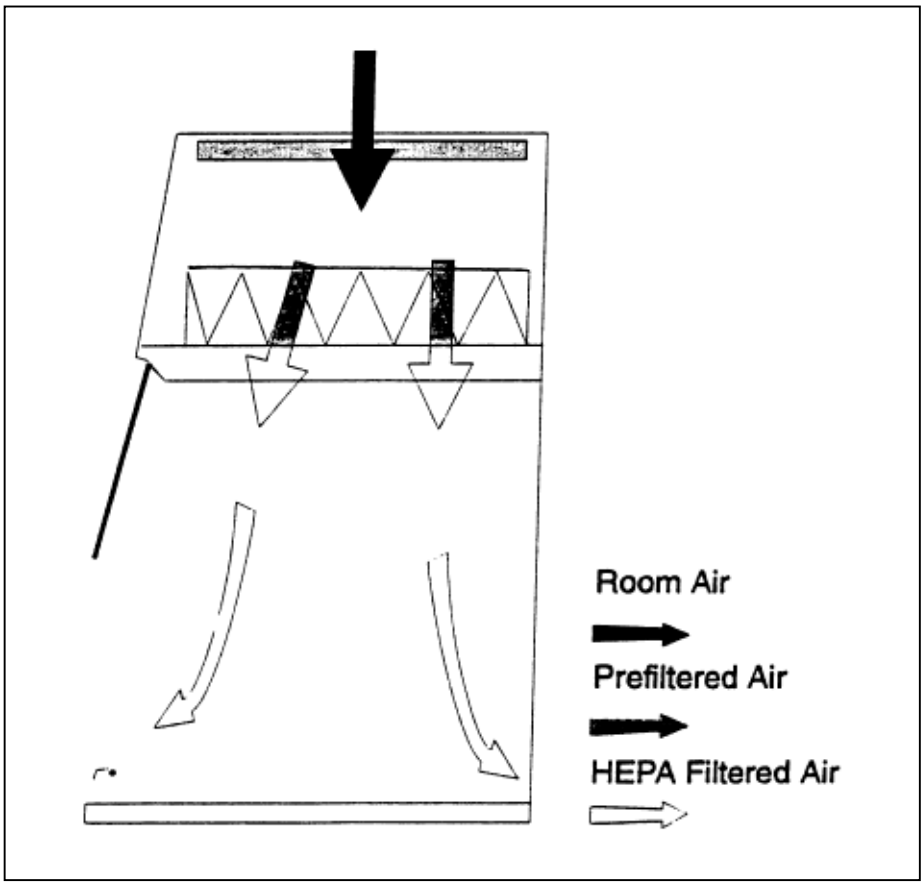

Figure 2

Component Identification – See Figure 3

1. **Speed Control**. The solid-state speed control regulates the speed of the motorized impeller.

2. **Motorized Impeller**. The Safety Enclosure is equipped with a variable speed motorized impeller. The impeller wheel is dynamically balanced for low vibration and noise, and the low wattage requirements of the permanent split capacitor (PSC) motor reduces operating costs.

3. **Fluorescent Lamp**. The lamp is suspended above the work area, out of contact with the clean air.

4. **Filter System Indicator**. The two light systems indicate the pressure across the HEPA filter. During operation a 'Normal' indicator light stays on. When the HEPA filter becomes excessively loaded, the 'Service' light turns on, indicating the filter should be serviced.

5. **Filter Clamping Device**. The clamping devices seal the HEPA filter to the frame of the Safety Enclosure. The devices are spring-loaded to compensate for filter gasket compression.

6. **Sash**. The sash is constructed of _ inch laminated safety glass. It pivots up to allow loading and unloading of tall items.

7. **Control Panel**. The control panel, which is located above the sash, contains the filter system indicator light and the control switches.

8. **HEPA (High Efficiency Particulate Air) Filter**. The HEPA filter is rated to remove greater than 99.99% of all particles 0.3 micron in size.

9. **Lamp Starter(s)**. The lamp starter(s) for both the fluorescent and the optional UV lamps are located behind the control panel.

10. **UV (Ultraviolet) Lamp (not shown)**. The UV lamp found on some models of the Clean Bench allows the operator to surface disinfect the work area of the enclosure when it is not in use.

Component Identification

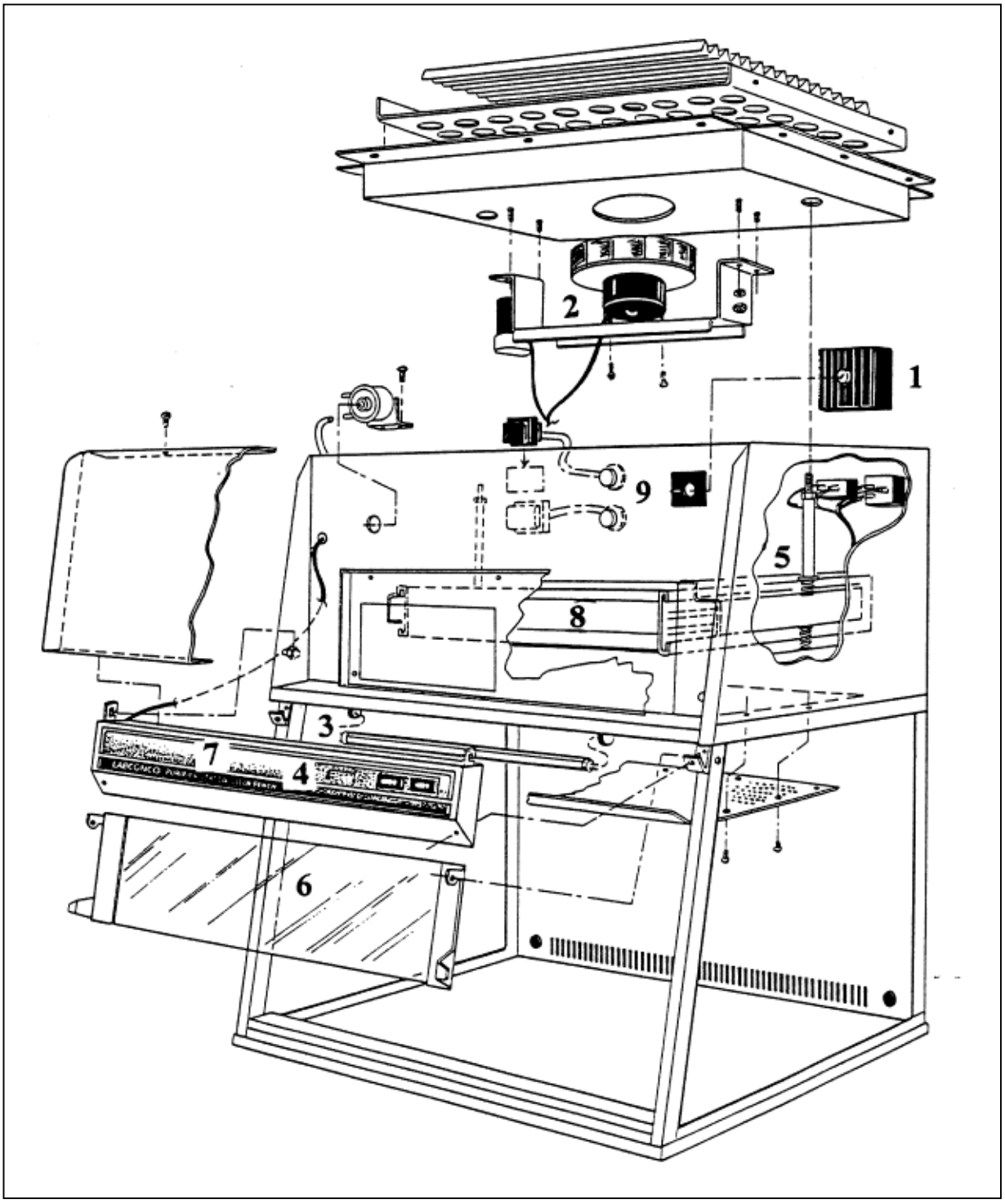

Figure 3

Preparation

DO NOT remove the Clean Bench from its carton until it is ready to be placed in its final location. Move the unit by placing a flat, low dolly under the shipping carton. **DO NOT** move the Clean Bench by tilting it onto a hand truck.

Location

The enclosure should be located away from traffic patterns and doors that could disrupt its airflow patterns. The Clean Bench should be located away from fans, heating and air conditioning registers, fume hoods, and any other air-handling device. All windows in the room should remain closed. Figure 4 shows the optimum locations for the Purifier.

There should be a minimum clearance of 12" between the air inlet on the top of the enclosure and any overhead obstructions.

NEVER place items on top of the enclosure. They may block or restrict the air intake on the top of the cabinet, affecting performance.

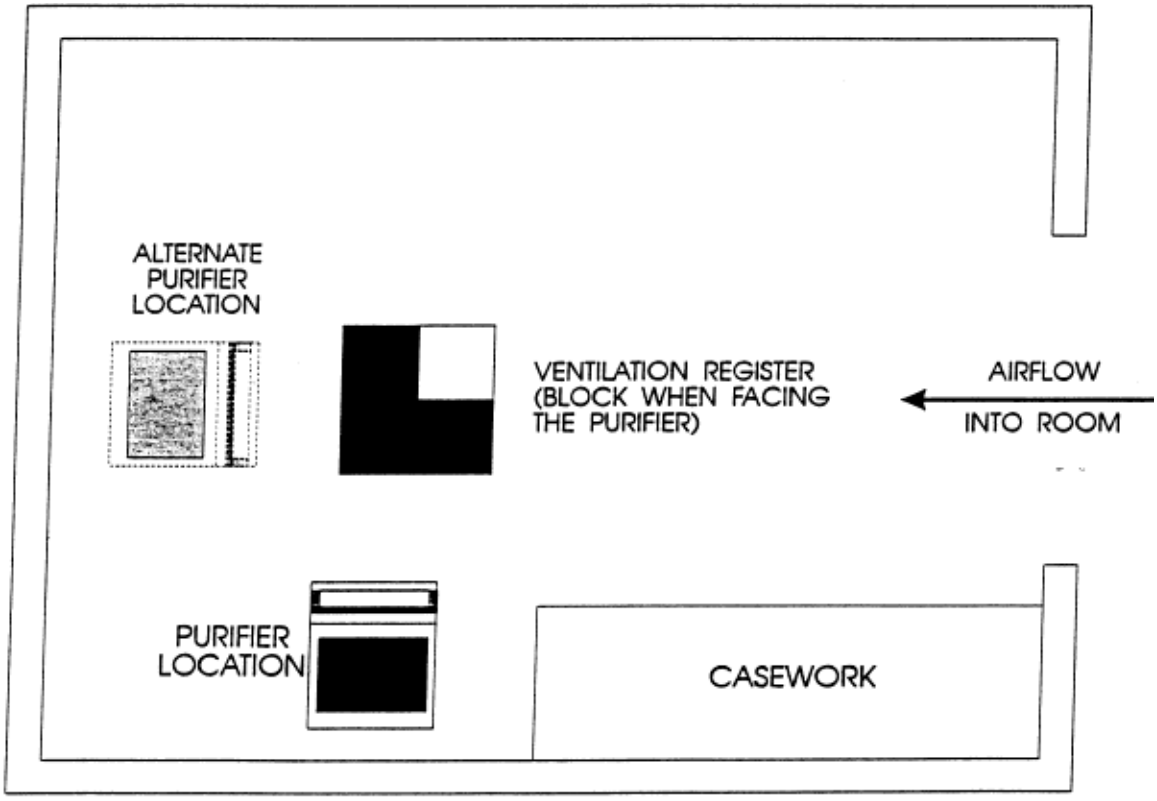

Figure 4

Installing the Purifier on the Work Surface

Labconco offers an optional molded work surface to capture minor spills. The work surface is available for both the 2 and 3-foot wide enclosures.

Clean Bench Model	Width (feet)	Work Surface
3740000 (All models)	2	4862100
3750000 (All models)	3	4863100

Installing the Clean Bench on the Work Surface:

1. Position the work surface in its intended location, with the front of the work surface, (wide flange), towards you.
2. Insert two of the supplied mounting screws in the rear holes of the work surface. Leave the screws loose to allow for positioning the unit.
3. Place the Clean Bench on the work surface and slide the rear flange under the rear mounting screws.
4. Rotate the airfoil on the front of the unit to expose the two front mounting holes.
5. Insert the front screws through the Clean Bench brackets and into the work surface. Tighten securely. Rotate airfoil back into its standard position.
6. Tighten the two rear screws to finish this installation.

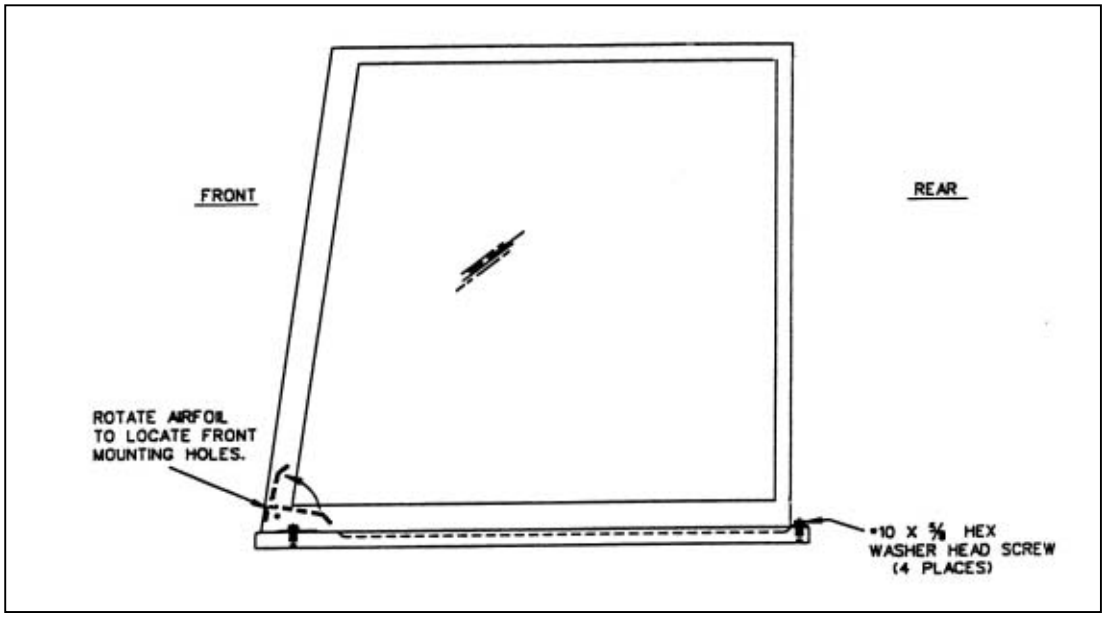

Figure 5

Electrical Connections

Electrical requirements are as follows:

115 VAC Models:

3740000, 3740001 and 3750000, 3750001 all models 115 VAC, 5 Amp, 60 Hz.

To connect the enclosure to electrical service, plug the power cord into the power cord socket located on the right rear side of the enclosure rear panel, as shown in Figure 6.

230 VAC Models:

3740020, 3740021 and 3750020, 3750021 all models 230 VAC, 3 Amp, 50 Hz.

To connect these enclosures to electrical service, attach the appropriate type of plug to the end of the power cord. Plug the power cord into the power cord socket shown in Figure 6.

NOTE: Always follow the plug manufacturer's instructions for the proper assembly and testing of the plug and power cord.

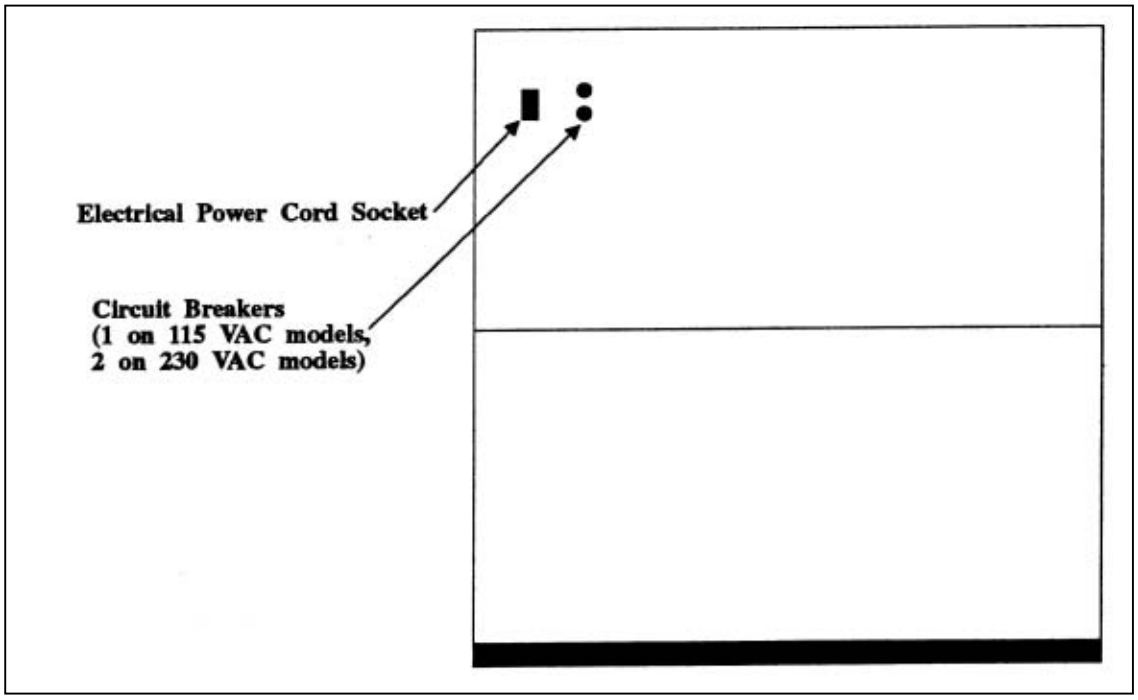

Figure 6

Because air from the work area is dispersed directly into the laboratory, the Purifier Vertical Clean Bench should never be used in conjunction with biohazardous material, toxins, or radionuclides. The operator and qualified safety officer(s) must carefully assess the risk associated with any operation performed in a Clean Bench.

The Purifier Vertical Clean Bench should be certified by a qualified certification technician before its initial use. The Clean Bench should be recertified whenever it is relocated, serviced, or at least annually thereafter.

Some components of the Purifier Vertical Clean Bench should only be serviced by a qualified certification technician. Ensure that the unit is connected to electrical service in accordance with local and national electrical codes. Failure to do so may create a fire or electrical hazard. **DO NOT** remove or service any electrical components without first disconnecting the Purifier from the electrical service.

Avoid the use of flammable gases or solvents in the Purifier. **Care must be taken to ensure against the concentration of flammable or explosive gases or vapors**. An open flame should **NOT** be used in the Purifier. Open flames may disrupt the airflow patterns in the Clean Bench. Gases under high pressure should not be used in the Purifier Clean Bench, as they may disrupt the airflow patterns.

The surface of the HEPA filters is fragile, and should not be touched. Care must be taken to avoid puncturing the HEPA filter during installation or normal operation. If you suspect that a HEPA filter has been damaged **DO NOT** use the Clean Bench; contact a local certification agency or Labconco at 800-821-5525 for recertification information.

The HEPA filter in the Purifier Vertical Clean Bench will gradually accumulate airborne particulate matter from the room and from work performed in the Clean Bench. The rate of accumulation will depend upon the cleanliness of the room air, the amount of time the Clean Bench is operating, and the nature of work being done in the Clean Bench. With normal usage, the HEPA filters will last two to five years before requiring replacement.

Proper operation of the Clean Bench depends largely upon the cabinet's location and the operator's work habits. Consult the 'Installation' and 'Normal Operation' sections of this manual for further details.

Clean the interior surfaces of the Clean Bench with mild household detergent. **DO NOT** use abrasive cleaners, bleach, or solvents, as they may damage surfaces.

Avoid direct exposure to Ultraviolet (UV) radiation; NEVER work in or near the Clean Bench when the UV light is on.

NEVER place items on top of the Clean Bench. They may block or restrict the intake opening on the top of the cabinet, affecting its performance.

When surface disinfecting the Purifier:

Avoid splashing the disinfecting solution on skin or clothing.

Ensure adequate ventilation.

Carefully follow the manufacturer's safety instructions when handling disinfectants and always dispose of disinfecting solutions in accordance with local and national laws.

Disinfectants with high concentrations of free chlorine will corrode stainless steel components of the Purifier after extended contact.

WARNING: The enclosure weighs over 70 lbs. (33 Kg.). The carton allows for lifting with a mechanical lift truck or hand truck. If you must lift manually, have at least two people lift and follow safe lifting guidelines.

Prior to use, the Clean Bench should be certified by a qualified certification technician. Under normal operating conditions, the unit should be recertified at least annually or if serviced the certifier should perform the following tests:

Downflow Velocity Test

HEPA Filter Leak Test

In addition, the following tests should also be performed at the user's discretion.

Electrical Leakage and Ground Circuit Resistance Test

Measurement of Line Voltage and Current

Smoke Test to determine proper airflow patterns

Lighting Intensity Test (when appropriate)

Noise Level Test (when appropriate)

Vibration Test (when appropriate)

Starting the Clean Bench

To start the unit, turn the blower switch to the 'ON' position, as shown in Figure 7.

Reading the Filter System Indicator

The two light system located on the control panel as shown in Figure 7 indicates the pressure across the HEPA filter. During operation, a green 'NORMAL' indicator light stays on. When the HEPA filter becomes excessively loaded, the 'NORMAL' light turns off and the 'SERVICE' light turns on, indicating the unit should be serviced. A qualified certifier can then determine if the HEPA filter needs to be replaced.

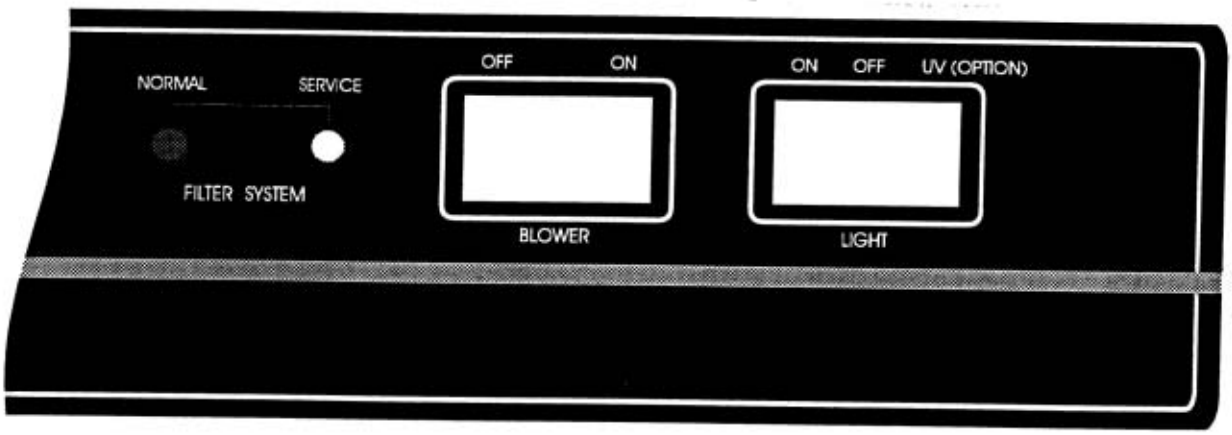

Figure 7

Use of the Clean Bench

Planning

- Thoroughly understand procedures and equipment required before beginning work.
- Arrange for minimal disruptions, such as room traffic or entry into the room, while the Clean Bench is in use.

Start-Up

- Turn off the UV light, if included.
- Turn on the fluorescent light and Clean Bench blower.
- Check the prefilter for obstructions, and note the filter system indicator.
- Wipe down the interior surfaces of the Clean Bench with a mild household detergent. **DO NOT** use abrasive cleaners, bleach, or solvents, as they may damage the work surface of the Clean Bench.
- Allow the Clean Bench to operate unobstructed for 5–15 minutes.
- Wear a long sleeved lab coat with knit cuffs and over-the-cuff rubber gloves. Use protective eyewear.

Loading Materials and Equipment

- Only load the materials required for the procedure. Do not overload the Clean Bench.
- Do not obstruct the air diffuser.
- Large objects should not be placed close together.
- After loading the Clean Bench, wait 2-3 minutes to purge airborne contaminants from the work area.

NORMAL OPERATION

Work Techniques

- Keep all materials at least 4 inches inside the Clean Bench, and perform all contaminated operations as far into the work area as possible.
- Segregate all clean and contaminated materials in the work area.
- Arrange materials to minimize the movement of contaminated materials into clean areas.
- Keep all discarded contaminated material to the front of the Clean Bench.
- Avoid moving materials or the operator's hand and arms in and out of the work area during use.
- Avoid the use of an open flame.
- Use proper aseptic technique.
- Avoid using techniques or procedures that disrupt the airflow patterns of the Clean Bench.

Final Purging

- Upon completion of work, the Clean Bench should be allowed to operate for 2-3 minutes undisturbed, to purge airborne contaminants from the work area.

Wipe-Down

- Wipe down the interior surfaces of the Clean Bench with a mild household detergent or cleaner, and allow to dry.

Shut Down

- Turn off the fluorescent light and Clean Bench blower. Turn on the UV light, if applicable.

Under normal operation, your Purifier Clean Bench will require little routine maintenance. The following schedule is recommended:

Weekly

- Wipe down the interior surfaces of the Clean Bench with a mild detergent or cleaner, and allow to dry.
- Using a damp cloth, clean the exterior surfaces of the Clean Bench, particularly the front and top of the Clean Bench, to remove any accumulated dust.

Monthly

(or more often as required)

- Check the prefilter and replace if necessary. The prefilter should be replaced at least quarterly.
- All weekly activities.

Quarterly

- Replace the prefilter.
- All monthly activities.

Annually

- Have the Clean Bench recertified by a qualified certification technician.
- Replace the UV lamp (on applicable models)
- All quarterly activities.

Biannually

- Replace the fluorescent lamp as required.
- All annual activities.

HEPA FILTERS

The HEPA filter in the Purifier Vertical Clean Bench will gradually accumulate airborne particulate matter from the room. The rate of accumulation will depend upon the cleanliness of the room air, the amount of time the unit is operating, and the nature of work being done in it. In typical installations and usage, the HEPA filters will last two to five years before requiring replacement.

To determine if the HEPA filter should be replaced, a qualified certifier should adjust the speed control at its maximum setting. If the average inflow, as calculated in the 'Airflow Data Table' section of this manual is less than needed, the filter should be replaced.

The HEPA filter for the Series 3740000 Clean Bench is Labconco part #3707900, and measures 18" x 18" x 3-3/16".

The HEPA filter for the Series 3750000 Clean Bench is Labconco part #3707901, and measures 30" x 18" x 3-3/16".

Under normal operating conditions, the Vertical Clean Bench should be recertified at least annually if serviced. The certifier should perform the following tests.

- Downflow Velocity Test
- HEPA Filter Leak Test

In addition, the following tests should also be performed at the user's discretion:

- Electrical Leakage and Ground Circuit Resistance Test
- Measurement of Line Voltage and Current
- Smoke Test to determine proper airflow patterns
- Lighting Intensity Test (when appropriate)
- Noise Level Test (when appropriate)
- Vibration Test (when appropriate)

Changing the Prefilter

The prefilter should be replaced at least quarterly, or more often, as conditions require.

1. Carefully lift the prefilter element straight up and out of the Clean Bench.
2. Install a new prefilter element by pressing it into position in the Clean Bench.

   The prefilter for the 2 foot Purifier Clean Benches is Labconco part #3718000.
   The prefilter for the 3 foot Purifier Clean Benches is Labconco part #3718001.

Sash Adjustment

Rotate the sash to its up position by pulling the sash tabs or the lower edge of the sash away from the front of the unit, and holding it in an open position.

Dress Panel Removal

1. Locate the front dress panel, just above the control panel. Remove the two screws located on the top of the panel. Remove the panel by pulling it slightly upward and out, as shown in Figure 8.

Fluorescent Lamp Removal

1. Remove the front dress panel as described above.
2. Locate the control panel on the front of the cabinet, which has the filter indicator lights and switches. Remove the screws located on each lower end of the panel. Swing the panel upward for access to the fluorescent lamp as shown in Figure 8.
3. Remove the fluorescent lamp by rotating the lamp and pulling it straight out of its sockets.
4. Install the new lamp by reversing the removal procedure.

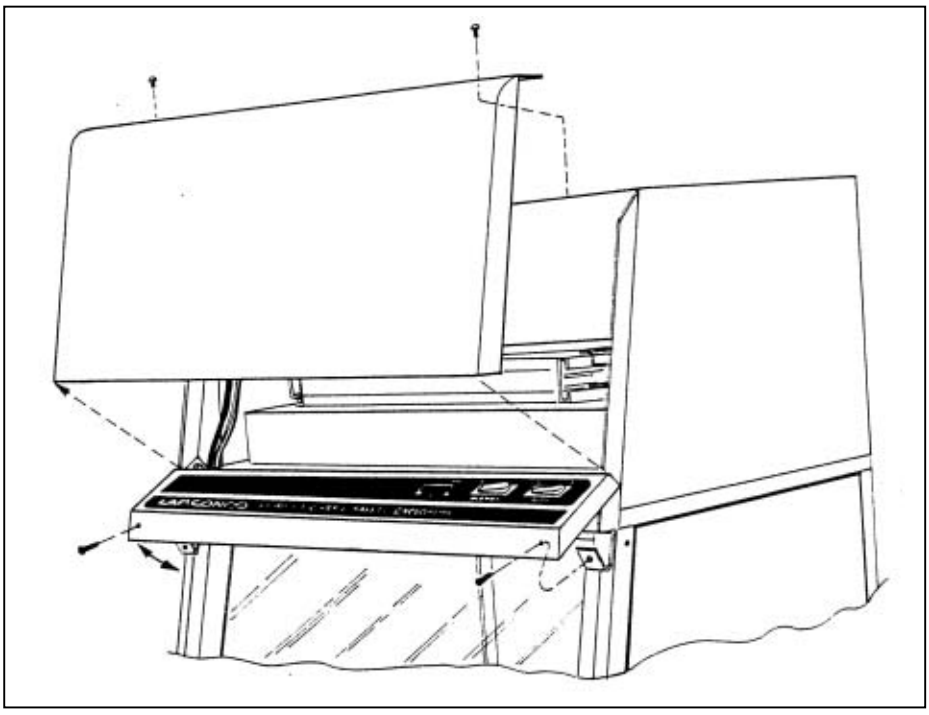

Figure 8

Changing a Lamp Starter

NOTE: Both the fluorescent and UV lighting systems utilize a starter (preheat) style lighting system. The starters for either system are interchangeable. If one lighting system works, and the other does not work, or operates erratically, try switching the starters. If the situation is eliminated or reversed, replace the defective starter.

NOTE: Two replacement starters have been included with the unit in the instruction manual package.

1. Unplug the Clean Bench.
2. Remove the front dress panel as described above.
3. The starters are located on the left side of the front panel, above the HEPA filter. Remove them from the module depressing and twisting them counterclockwise approximately 1/8 turn. Pull the starter straight out of the plug and replace with an FS-2 type starter only.
4. Reassemble the cabinet and plug it in.

Changing the UV Lamp

NOTE: For optimum performance, the UV lamp should be changed on an annual basis. The UV lamp and the work area of the cabinet must be thoroughly disinfected before removing the lamp.

1. Unplug the cabinet.
2. Swing the sash from its lower position by rotating and holding the sash up.
3. Remove the UV lamp by rotating and pulling it straight out of its sockets.
4. Install the new lamp by reversing the removal procedure.

Speed Control Adjustment

NOTE: The speed control should only be adjusted by a qualified certifier.

1. Remove the front dress panel as described on page 19.
2. Adjust the speed control as required by turning the screw counterclockwise to increase blower speed, or clockwise, to decrease the blower speed.
3. Replace the front dress panel and re-establish the inflow air velocity.



Figure 9

Filter Indicator System Adjustment

To adjust the filter indicator light system, remove the front dress panel as described on page 19, and follow the instructions on the decal located to the left of the lamp starters.

HEPA Filter Replacement

NOTE: **The enclosure must be properly decontaminated before servicing the HEPA filter. The HEPA filter should be serviced only by a qualified certifier. After the HEPA filter is replaced, the unit MUST be certified**.

1. Unplug the cabinet.
2. Remove the front dress panel as described on page 19.
3. Remove the filter cover panel.
4. Remove the prefilter.
5. Using the 9/16" deep socket, loosen the filter clamp nuts located in the access holes. Refer to figure 10 page 23.
6. With the clamp bolts loosened, the supply filter-clamping frame should be clear of filter. Carefully pull the filter straight out of the unit and discard properly.
7. With the filter removed, inspect the clamping frame and the frame of the cabinet for damage.
8. Cover the surface of the new HEPA filter gasket with a light coating of silicone grease, if desired.
9. Install the new HEPA filter by pushing it straight into the cabinet, ensuring that it is correctly oriented and the filter fits properly in the cabinet.

CAUTION: The filter clamp nuts should only be tightened enough to ensure a proper seal at maximum tightness, the height of the filter spring should equal 1" (25 mm). NEVER tighten the clamp nuts beyond this setting. See Figure 10 page 23.

10. Tighten the clamp nuts uniformly until the filter gasket is properly compressed against the cabinet frame. Inspect the seal thoroughly before proceeding.
11. Reinstall the front dress panel and the prefilter on the top of the unit.
12. Plug the cabinet in and have it recertified before use.

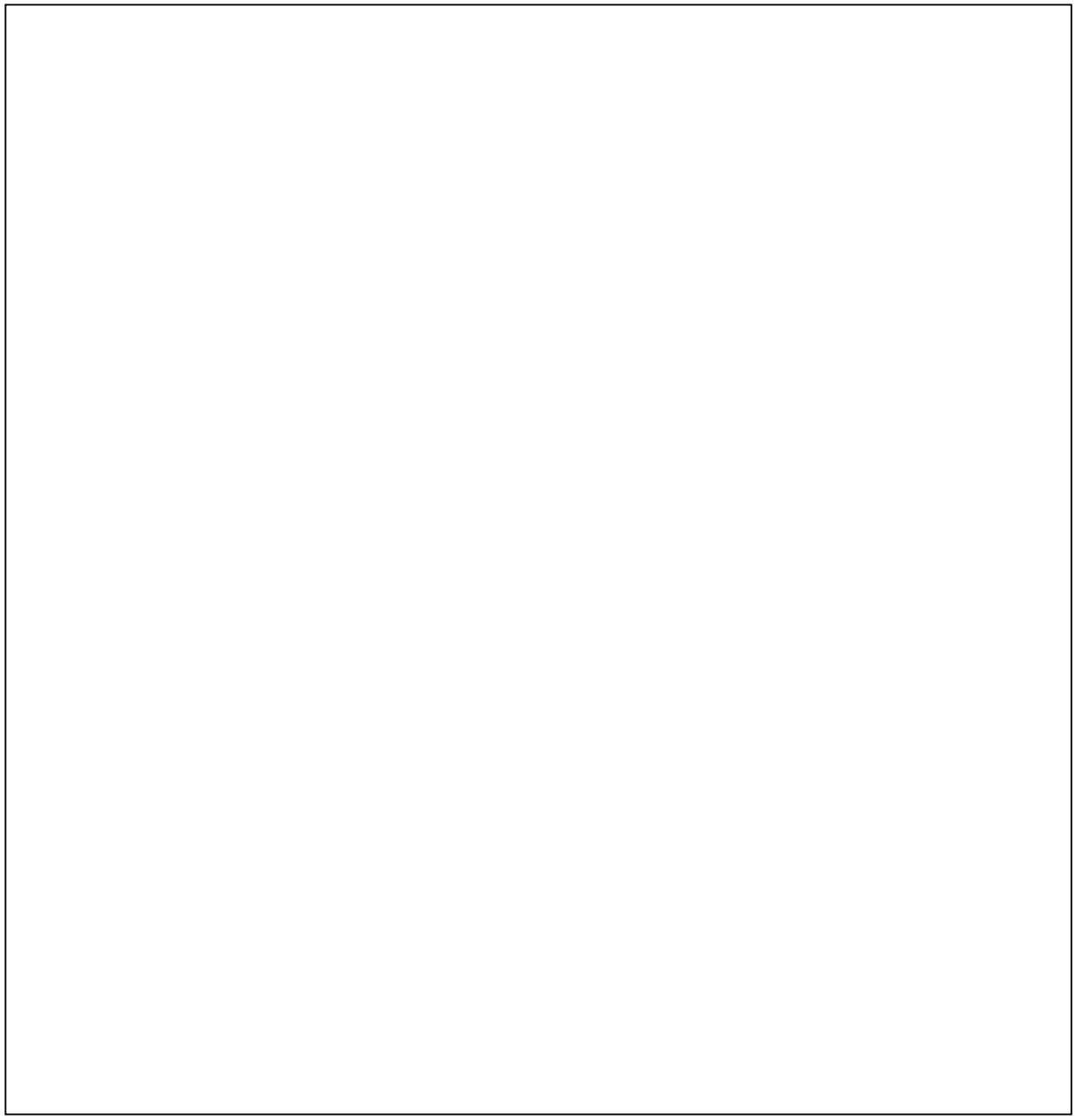

Figure 10

HEPA Filter Leak Test Procedure

> **NOTE:** Use a Laskin nozzle type generator. **DO NOT** use more than one nozzle operating at 20 PSIG. If one nozzle at 20 PSIG generates excess aerosol, reduce the pressure on the nozzle to 5-10 PSIG.

1. Remove the Clean Bench prefilter, diffuser and the front dress panel as described on page 19.
2. Place the aerosol generator discharge near the air intake of the unit.
3. Turn the Clean Bench on and let it operate for several minutes to stabilize.
4. Start the aerosol generator. Ensure that only one nozzle is open and the generator is operating at 5-20 PSIG.
5. Place the photometer pickup at one of the starter holes in the front panel. The air discharged from this hole should be sampled and the photometer calibrated, using the manufacturer's instructions to read 100% transmission.
6. Replace the front dress panel.
7. Using the photometer pickup, scan the edges and surface of the HEPA filter. Using the methodology recommended in the *Institute for Environmental Sciences Recommended Practice* IES-RP-CC-002-86.
8. The average concentration on the downstream (clean) side of the filter should be 0.01% or less.
9. Reinstall the diffuser and prefilter.

Motorized Impeller Replacement

The motorized impeller should only be serviced by a qualified certifier. Use caution during the removal of the impeller unit. The prefilter and impeller shelf unit is awkward to handle; use caution when removing it. A second person to assist in the removal of the shelf unit is recommended. The impeller is a non-serviceable component, and must be replaced as a unit. When the impeller is replaced, a new capacitor should be installed. Following replacement of the motorized impeller, the Clean Bench must be re-certified by a qualified certifier.

1. Unplug the Clean Bench
2. Remove the prefilter and impeller shelf assembly by removing all of the screws located on the top of the unit. **NOTE: DO NOT** remove the two screws that hold the front dress panel in place.
3. Carefully lift the prefilter and impeller shelf straight up until clear of the HEPA filter clamp nuts.
4. Tilt the prefilter and impeller shelf, and while supporting it, disconnect the impeller ground line and neutral wires.
5. Invert the prefilter and impeller shelf, and loosen the four nuts that secure the impeller brace to the impeller shelf. Remove the impeller and its mounting brace from the shelf.
6. Remove the four fasteners that secure the impeller to its brace.

7. Disconnect the two wires connecting the motor to the capacitor. Remove the impeller and capacitor from the brace.
8. Replace the capacitor with a new one of equal voltage and capacity.
9. Reassemble the unit by reversing the disassembly steps. Re-certify the unit.

Air Velocity Test

Procedure

1. Turn on the blower(s) and allow them to stabilize for 5 minutes. Allow at least 5 minutes for the air velocity to stabilize after each adjustment. The prefilter must be in place during the adjustment operation.
2. Using a mount for a thermo anemometer probe, take readings on approximately 4" x 4" grid pattern 6" below the diffuser. Start at a point 4" in from the interior surface of the extrusion holding the glass side panel, 4" from the rear wall and at the bottom edge of the sash. This method should result in a grid of 12 or 24 test points for the 2 or 3-foot wide units, respectively.
3. Calculate the average.

Acceptance

Average of the measurements must fall in the range of 70 ± 10 FPM. The intent is to adjust the speed control to give as close to 70 FPM as practical. The motor must start with ease from a dead stop. If the motor will not start, the speed control setting must be increased.

Storage

If the Purifier is to be left unused for more than one month, the unit should be prepared for storage.

1. Surface disinfect or decontaminate the cabinet as required.
2. Unplug the unit.
3. Cover and seal the work area access opening and the inlet opening with plastic sheeting.
4. Ensure that the cabinet will not be moved or disturbed while in storage.

NOTE: The cabinet should not be stored in excessive humidity or temperature extremes. If the cabinet is moved during storage it must be re-certified before use.

Ref. No.	Qty.	Catalog No.	Description
1	1	1327204	Circuit Breaker, 5 Amp
2	2	1327200	Circuit Breaker, 3 Amp
3	1	3704400	Speed Control Assembly, 115 VAC
3A	1	3704401	Speed Control Assembly, 230 VAC
4	1	1302300	Switch – 2 position
4A	1	1302400	Switch – for UV Lamp
5	2	1271800	Starter - #FS-2
6	1	3708300	Lamp, 15 inch Fluorescent (FT8)
6A	1	1271700	Lamp, 30 inch Fluorescent (FT8)
7	1	3707900	HEPA Filter, 2 foot units
7A	1	3707901	HEPA Filter, 3 foot units
8	1	3717600	Motorized Impeller, 2 foot units, 115 VAC
8A	1	3717700	Motorized Impeller, 2 foot units, 230 VAC
8B	2	3717400	Motorized Impeller, 3 foot units, 115 VAC
8C	2	3717500	Motorized Impeller, 3 foot units, 230 VAC
9	1	1304800	Motor Capacitor, 2 foot units, 115 VAC, 6 MFD
9A	1	1304700	Motor Capacitor, 2 foot units, 230 VAC, 5 MFD
9B	2	1301200	Motor Capacitor, 3 foot units, 115 VAC, 7.5 MFD
9C	2	1304600	Motor Capacitor, 3 foot units, 230 VAC, 3.0 MFD
10	1	1270100	Lamp, 15 inch UV (FT8) (NOT SHOWN)
11	1	3718000	Prefilter, 2 foot units
11A	1	3718001	Prefilter, 3 foot units

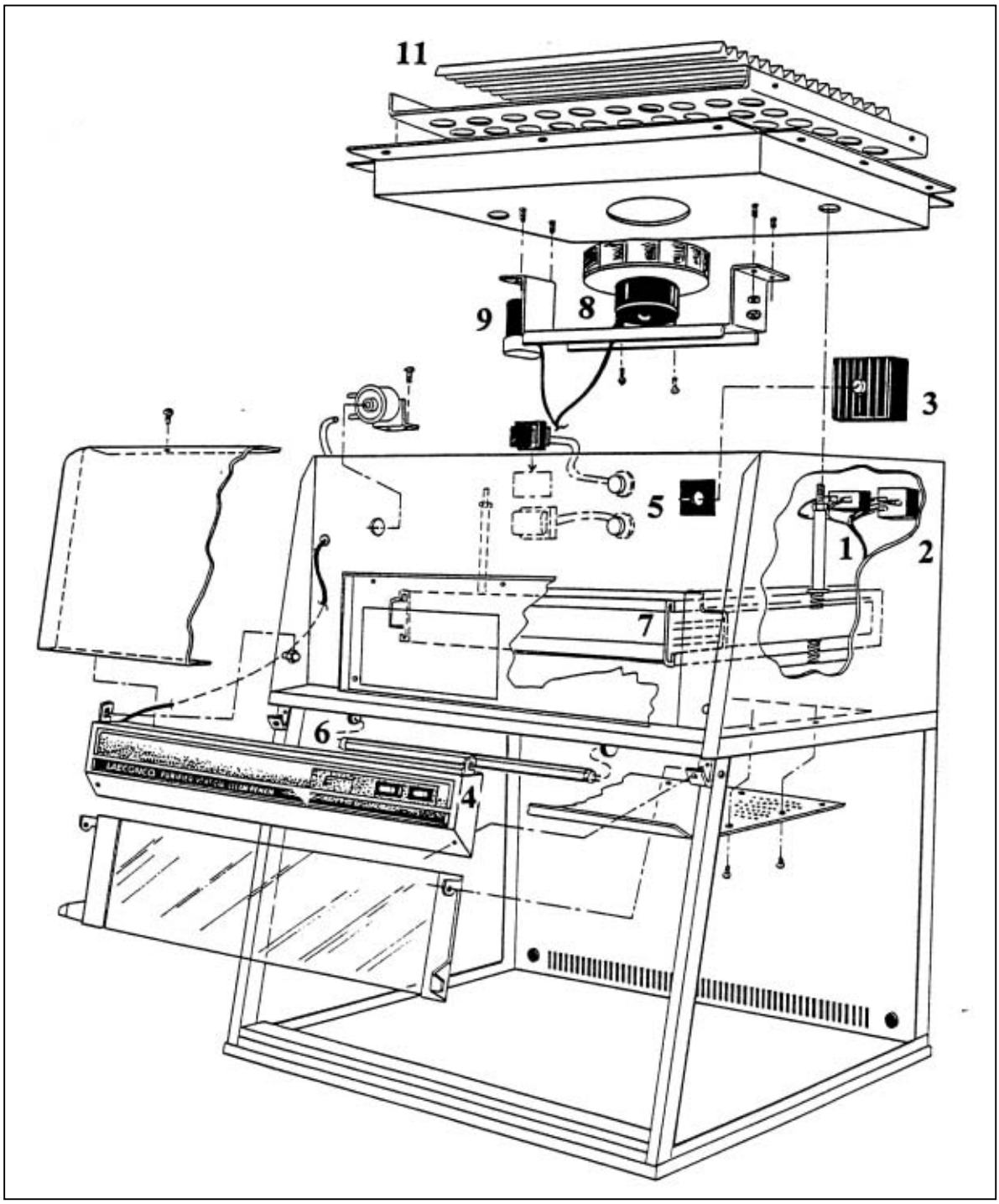

Figure 11

CABINET DIMENSIONS

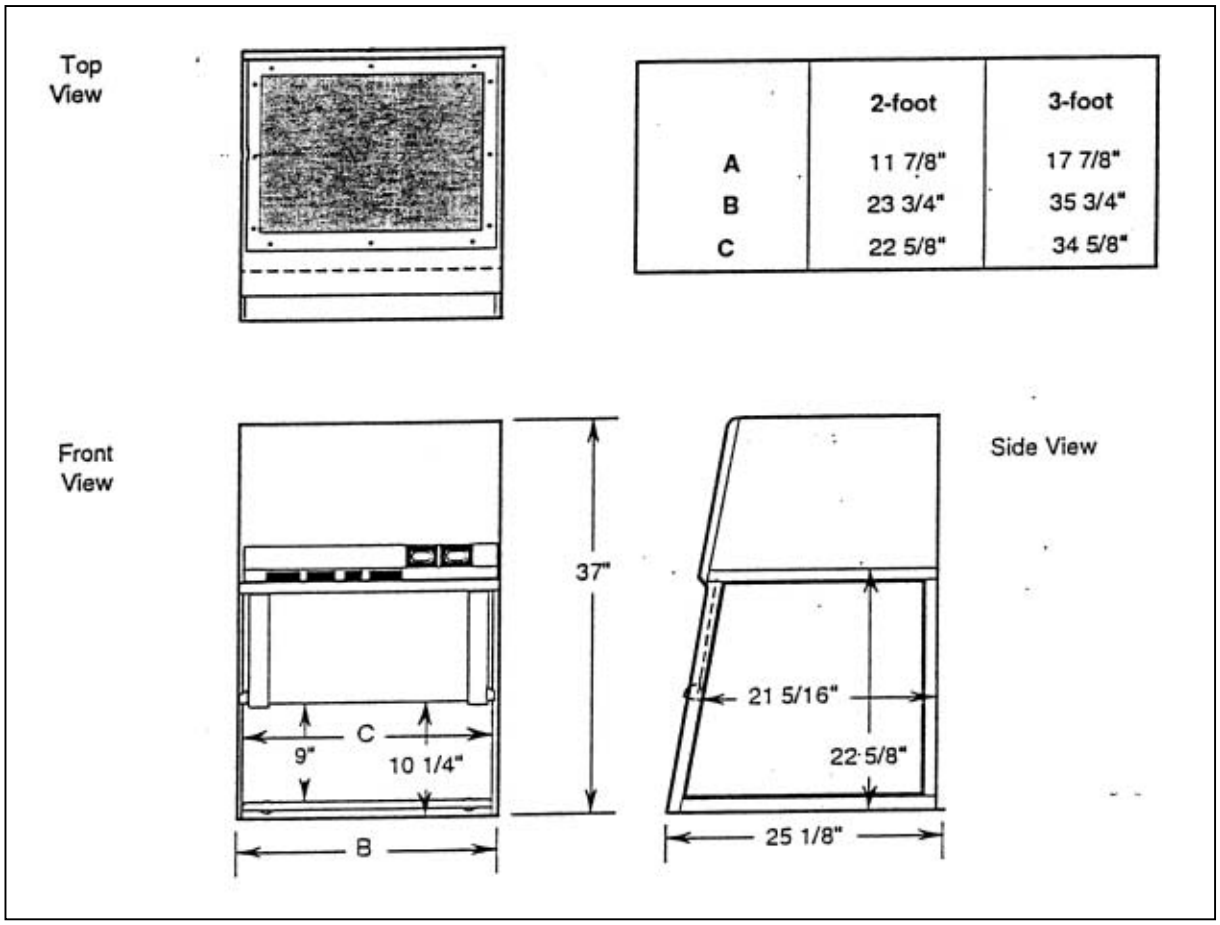

	2-foot	3-foot
A	11 7/8"	17 7/8"
B	23 3/4"	35 3/4"
C	22 5/8"	34 5/8"

Figure 12

CABINET MODEL	ELECTRICAL REQUIREMENTS
3740000, 3740001	115 VAC – 60 Hz 1 Phase – 2.5 Amp
3750000, 3750001	115 VAC – 60 Hz 1 Phase – 2.5 Amp
3740020, 3740021	230 VAC – 50 Hz 1 Phase – 1.5 Amp
3750020, 3750021	230 VAC – 50 Hz 1 Phase – 1.5 Amp

MOTOR SPECIFICATIONS

MODELS 3740000, 3740001	**3750000, 3750001 (2 each)**
115 VAC – 60 Hz	115 VAC – 60 Hz
1.5 Full Load Amps	1.64 Full Load Amps
2300 RPM	2700 RPM
Automatic Thermal Protection	Automatic Thermal Protection

MODELS 3740020,3740021	**3750020, 3750021 (2 each)**
230 VAC – 50 Hz	230 VAC – 50 Hz
.87 Full Load Amps	.82 Full Load Amps
2300 RPM	2700 RPM
Automatic Thermal Protection	Automatic Thermal Protection

ENVIRONMENTAL CONDITIONS

The Purifier Enclosure is designed to operate under the following conditions:

- indoor use
- altitude up to 2000 m
- temperature 5°C to 40°C
- maximum relative humidity 80% for temperatures up to 31°C decreasing linearly to 50% relative humidity at 40°C
- main supply voltage fluctuations not to exceed ± 10% of the nominal voltage
- transient overvoltages according to Installation Category II (overvoltage categories per IEC 1010)
- pollution degree 2 in accordance with IEC 464

WIRING DIAGRAM

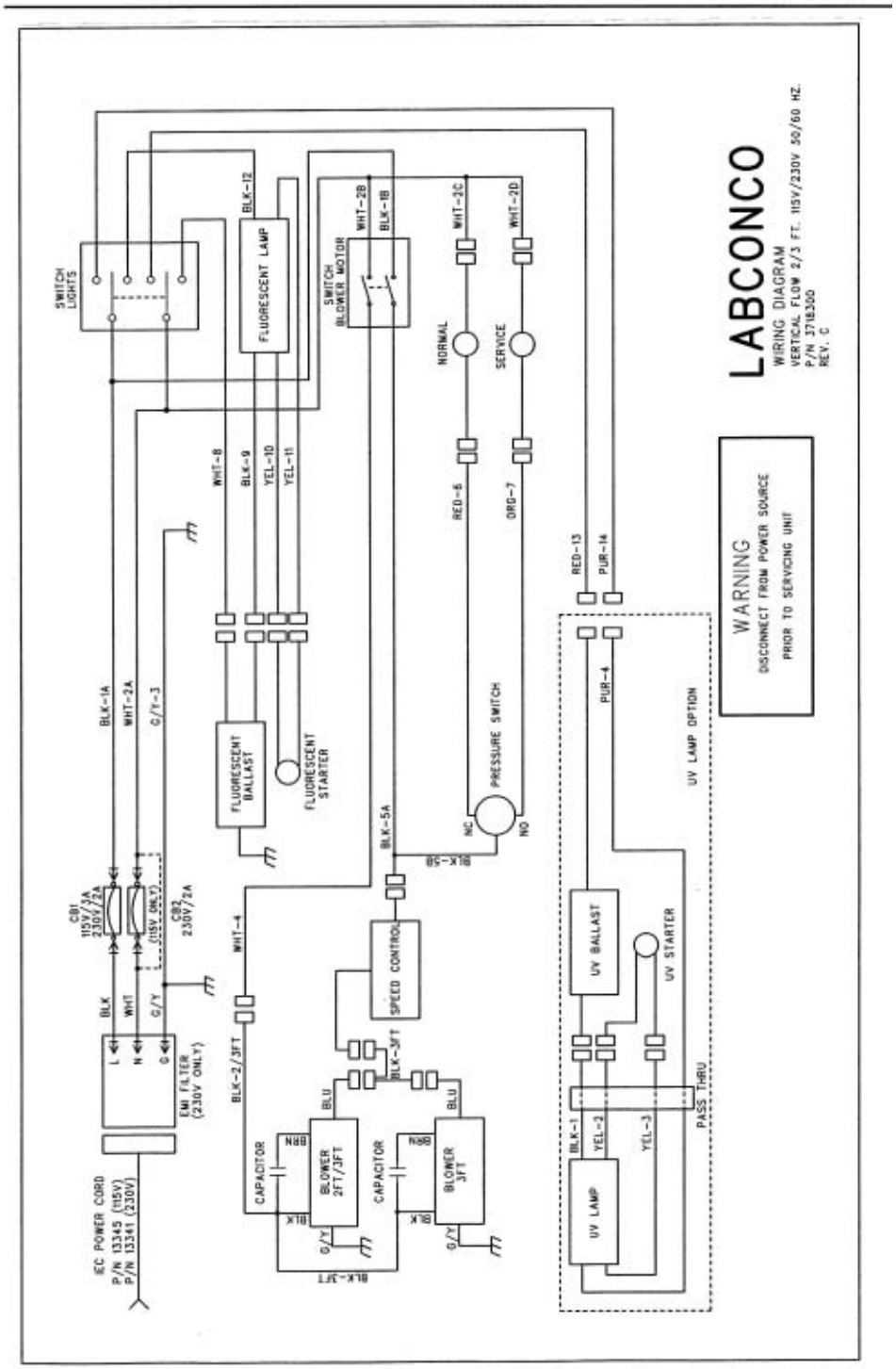

The downflow velocity of the Vertical Clean Bench should be measured in a plane 6" below the diffuser. A boundary of 6" should be established on the sides and rear of the work area, and readings should be taken at the boundary edges, and at intervals of approximately 6". This would yield a test grid of three rows from back to front, with 3 columns of test points (9 test points total) for a two-foot unit, and 5 columns of test points (15 test points total) for three-foot units.

Downflow readings should average 70 ± 10 FPM. For more demanding environments, the downflow can be increased to 90 ± 10 FPM.

If you have any questions regarding certification of your Purifier, please contact Labconco's Product Service Department at 1-800-821-5525 between the hours of 7:00 A.M. to 6:00 P.M. CST.

TROUBLESHOOTING

PROBLEM	CAUSES	CORRECTIVE ACTION
Cabinet blower and lights won't turn on	Unit not plugged into outlet	Plug the Purifier into appropriate electrical service
	Circuit breaker(s) tripped	Reset circuit breaker(s)
Motorized Impeller won't turn on but lights work	Impeller wiring is disconnected	Inspect impeller wiring
	Impeller switch is defective	Replace impeller switch
	Motorized impeller is defective	Replace motorized impeller
Cabinet impeller turns on but lights don't work	Lamp not installed correctly	Inspect lamp installation
	Lamp wiring is disconnected	Inspect lamp wiring
	Defective lamp starters	Replace lamp starters
	Lamp is defective	Replace lamp
	Lamp switch is defective	Replace lamp switch
	Defective lamp ballast	Replace lamp ballast
'Service' light is on	Blockage of the intake	Check the intake on top of the unit to ensure it is not blocked or restricted
	Prefilter loading	Replace prefilter
	HEPA filter loading	The light will turn on when the filter is loaded.

If you are having problems with the operation of your Purifier, call Labconco's Customer Service Department at 800-821-5525 or 816-333-8811.

Many excellent reference texts and booklets are currently available. The following is a brief listing:

Byran, D., and R. C. Marback. 1984. Laminar-airflow equipment certification*: What the Pharmacist needs to know. American Journal of Hospital Pharmacy*. 41.1343-1348.

General Services Administration. 1988. *FED-STD-209E Federal Standard – Clean Room and Work Station Requirements, Controlled Environment.* Washington, D. C.

IES Recommended Practice: IES-RP-CC-001-86. *Recommended Practice for HEPA Filters*. Mt. Prospect, IL: Institute for Environmental Sciences. 1986.

IES Recommended Practice: IES-RP-CC-002-96. *Laminar flow Clean Air Devices*. Mt. Prospect, IL: Institute for Environmental Sciences. 1986

IES Document: IES-CC-011-85-T. *A Glossary of Terms and Definitions Related to Contamination Control.* Mt. Prospect, IL: Institute for Environmental Sciences. 1985.

OPERATING RECORD LOG

Customer Name _____ Model Number _____

Date Installed _____ Serial Number _____

Unit Location _____

Date	Comments

We are committed to providing our customers with quality equipment and service after the sale. Part of this objective involves keeping you informed of changes and new product additions. We, therefore, request that you take a moment to fill out the product registration card so we many know your location as well as some of the reasons that prompted you to purchase our product.

Labconco provides a warranty on all parts and factory workmanship. The warranty includes areas of defective material and workmanship, provided such defect results from normal and proper use of the equipment.

The warranty for all Labconco products will expire one year from date of installation or two years from date of shipment from Labconco, whichever is sooner, except the following:

- Purifier® Delta® Series Biological Safety Cabinets carry a three-year warranty from date of installation or four years from date of shipment from Labconco, whichever is sooner.
- Carts carry a lifetime warranty.
- Glassware is not warranted from breakage when dropped or mishandled.

This limited warranty covers parts and labor, but not transportation and insurance charges. In the event of a warranty claim, contact Labconco Corporation or the dealer who sold you the product. If the cause is determined to be a manufacturing fault, the dealer or Labconco Corporation will repair or replace all defective parts to restore the unit to operation. Under no circumstances shall Labconco Corporation be liable for indirect, consequential, or special damages of any kind. This statement may be altered by a specific published amendment. No individual has authorization to alter the provisions of this warranty policy or its amendments. Lamps and filters are not covered by this warranty. Damage due to corrosion or accidental breakage is also not covered.

WARNING: The disposal and/or emission of substances used in connection with this equipment may be governed by various federal, state or local regulations. All users of this equipment are urged to become familiar with any regulations that apply in the user's area concerning the dumping of waste materials in or upon water, land or air and to comply with such regulations.

SHIPPING CLAIMS

If a shipment is received in visibly damaged condition, be certain to make a notation on the delivering carrier's receipt and have their agent confirm the damage on your receipt. Otherwise, the damage claim may be refused.

If concealed damage or pilferage is discovered, notify the carrier immediately and retain the entire shipment intact for inspection. Interstate Commerce Commission rules require that the claim be filed with the carrier within 15 days after delivery.

NOTE: Do not return goods. Goods returned without prior authorization will not be accepted. Labconco Corporation and its dealers are not responsible for shipping damage. Claims must be filed directly with the freight carrier by the recipient. If authorization has been received to return this product, by accepting this approval, the user assumes all responsibility and liability for biological and chemical decontamination and cleansing. Labconco reserves the right to refuse delivery of any products, which do not appear to have been properly cleaned and/or decontaminated prior to return.

ACCESSORY PART #	DESCRIPTION
4862100	Work Surface – 2 Foot.
4863100	Work Surface – 3 Foot.

CONTACTING LABCONCO

If you have any questions that are not addressed in this manual, or if you need technical assistance, please contact Labconco's Sales Information Department at 1-800-821-5525, and Service Information at 1-800-522-7658 or 1-816-333-8811, between the hours of 7:00 a.m. and 6:00 p.m. Central Standard Time.

Labconco's mailing address is:

Labconco Corporation
8811 Prospect Avenue
Kansas City, Missouri 64132-2696

Fax # 816-363-0130

Visit Labconco through the Internet at:

http://www.labconco.com

or

email: labconco@labconco.com