LABCONCO CORPORATION 8811 Prospect Ave, Kansas City, MO 64132 (816) 333-8811
or (800) 821-5525 • (816) 363-0130 fax • labconco.com

Detailed Start Installation Guide for Glassware Washers

Preparations

Do not discard packaging until you have identified all parts that were shipped, and the products operate properly.

Safety Precautions

The following safety precautions must be followed by all personnel unpacking the equipment.

- Wear safety glasses
- Wear gloves
- No loose fitting clothes
- Wear close-toed shoes
- The packaging allows for lifting with a mechanical lift truck or hand truck. If you must lift the washer manually, use at least two (2) persons and follow safe lifting guidelines.

Packaging

- Unit ships on a skid – weight varies up to 300 lbs.
- Accessories will be in boxes – up to 20 lbs.

Requirements

Supplies

- Air gap for drain
- Water shut-off valve
- Appliance style braided hose with ¾-11 ½ GHT fitting and ¼" minimum inside diameter.

Tools & Equipment

- Box knife
- 9/16" wrench
- Flat-blade screwdriver
- Phillips screwdriver
- 5/16" nut driver
- Carpenter level
- Mechanical lift truck or hand truck

Labor

- 2 people

Location

- Area that is near the required utilities and provides enough space to accommodate required dimensions including the opening of the door.

Water

- Hot water
  - Hot water supply of 120°F (49°C) or higher.
  - Pressure between 20-120 psi (138-825kPa).
  - Verify required flow rate of 1.25 gallons per minute (4.7 L/min).

- Purified Water
  - Purified water source can be from a pressurized system or non-pressurized feed from a purified storage container.
  - Pressurized source requires a flow rate of 0.9 gallons per minute (3.4 L/min).
  - Each cycle requires a total of 3.2 gallons (12.0 L)

- Optional Cold Water Drain Kit refer to User's Manual for water requirements and installation.

Electrical

- 20 Amp circuit is required for 115V/ 230V 1.2kW and 2kW models
- 30 Amp circuit for 230V 3 phase 6kW models.
- 13 Amp circuit for 400V 3 phase 6kW models.

Drain

- The drain hose, with a 0.57" (1.45 cm) ID is installed during manufacture. The drain hose provides a flexible coupling to the building drain piping and can be secured with a spring or band hose clamp. A band hose clamp is provided with the washer.
- Tubing or pipe, 5/8" (1.6 cm) ID or larger, should be provided for the building drain. The use of an air gap is strongly recommended to prevent siphoning of wastewater into the washer (provided by plumbing supplier).
- Stand-pipe installation is an alternative drain method

Unpackaging

Have customer inspect packages before unpackaging.

- Document any damage by taking 4 photos of the package before unpackaging.
  - If there is damage, notify the customer immediately and retain the entire shipment intact for inspection by the carrier. The United States Interstate Commerce Commission rules require that claims be filed with the delivery carrier within fifteen (15) days of delivery.
- Remove the outer carton from the washer and thoroughly inspect it for damage that may have occurred in transit.
- Do not discard the carton or packing material for the washer until you have

checked all the components and installed and tested the washer.

- Do not remove the washer from its shipping skid until it is ready to be placed into its final location.
- Move the washer by placing a flat, low dolly under the shipping skid.

Remove the Racks

- Locate the Allen Wrench taped to the Quick Installation Guide in the plastic bag which is taped to the top of the unit.
- Push the Allen Wrench into the hole in the control panel until the door opens.
- Remove accessories and other items from inside the washer. Cut tie wraps and remove racks.
- Retain Allen Wrench for emergency access to the washer in case of power failure.

Figure 1

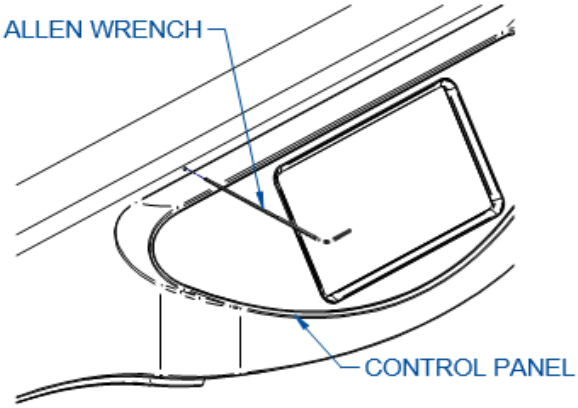

- Verify the washer components that were ordered are present and undamaged.
- Move the washer near the installation site.

Remove the Shipping Skid

- Gently place the washer on its **back**, positioning the washer on the shipping carton or other cushioning material. Tipping on any side other than back will damage the washer.
- Remove the six bolts fastening the skid to the washer.
- Retain the skid and fasteners until you test the various features of the washer.

Installation

Install the Leveling Feet

- Locate the holes on the bottom of the washer where the six skid-fastening bolts were previously attached. See Figure 2.
- Thread the six leveling feet into the holes until the overall distance from the bottom of the foot to the top of the washer is approximately the height required to fit in the opening on under counter models. The height of Freestanding models typically matches the countertop.
- Carefully move the washer into an upright position. Be careful to distribute the

weight evenly on the leveling feet when setting the washer upright.

- If installing a freestanding unit remove the back panel. Move the washer as close as possible to its final location but maintain access to the water connections and drain hose in the back. The water supply hoses will connect at the back of the washer. The wiring for the electrical connection will run from the rear of the unit through to the electrical box located behind the front toe kick panels.
- Adjust the leveling feet to level the washer and raise the unit to the approximate desired finished height. A final adjustment may be required after the washer is placed in its final position.
- Additional accessories, like the Cold Water Drain Kits, should be installed at this time. Refer to the assembly instructions included with each kit. Individual kit instructions are also included on the User's Manual USB Thumb Drive (shipped with the washer) or online at Labconco.com.

Hot Water Connection

A hot water supply line must be connected to the Glassware Washer.

- To prevent valve clogging, thoroughly flush the hot water lines from the supply source prior to connecting the washer to the water lines. The hot water inlet valve is located on the back of the washer base. The back panel of freestanding models must be removed to access the valve.
- The washer's hot water inlet valve is equipped with a male ¾-11 ½ GHT fitting. If needed, a male ¾ National Pipe Thread (NPT) hose fitting can be connected utilizing the GHT to NPT adapter provided with the washer. Connect the hot water supply coming from the customer-supplied shut off valve using an appliance style braided hose with ¾-11 ½ GHT fitting and ¼" minimum inside diameter. See Figure 2.
- On undercounter installations, an extra 3' of service loop is recommended for the supply hose to allow the washer to be slid in or out of its operating position.
- Be careful not to kink the water supply tube when the washer is placed into its final location. If kinking occurs because of limited space between the back of the washer and the wall behind the counter, it may be necessary to use an elbow fitting at the washer's valve connection.

Figure 2

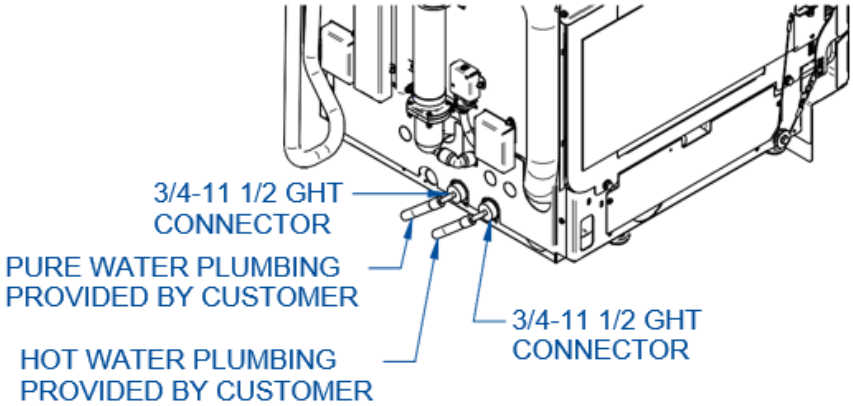

Pure Water Connection

A pure water supply may be connected to the Glassware Washer if pure water rinse(s) are required.

- To prevent valve clogging, thoroughly flush the pure water lines from the supply source prior to washer connection. The pure water inlet valve is located on the back of the washer base. The back panel of freestanding models must be removed to access the valve.
- The washer pure water inlet valve is equipped with a male ¾-11 ½ GHT fitting. If needed, a male ¾ National Pipe Thread (NPT) hose fitting can be connected utilizing the GHT to NPT adapter. Connect the pure water supply coming from the customer-supplied shut off valve using an appliance style hose with ¾-11 ½ GHT fitting and ¼" minimum inside diameter. See Figure 2.
- On undercounter installations, an extra 3' of service loop is recommended for the supply hose to allow the washer to be slid in or out of its operating position. Be careful not to kink the water supply tube when the washer is placed into its final location. If kinking occurs because of limited space between the back of the washer and the wall behind the counter, it may be necessary to use an elbow fitting at the washer's valve connection.
- If you are not using purified water during the rinse cycles, you may disable the pure water system. Turning off the pure water system will not allow programing or operation of wash cycles with pure water. If your pure water supply is pressurized with sufficient flow, you may disable the purified water pump. Refer to User's Manual Section 6: Accessories Screen.
- If the washer has been converted to a Mobile model and is moved to various locations, and if purified water is used, provisions must be made to use a flexible hose from a source of house-purified water. If a carboy is used, place the carboy on top of the washer or a carboy cart and move it with the washer. Take care not to let the hose kink or become damaged.
- If the purified water source is a carboy, the washer's self-priming pure water pump will draw water from either the top or the bottom opening of the carboy. If the purified water supply feeds directly from the carboy top, make certain the hose is always submerged below the water line to eliminate air entry into the system. Verify the carboy is vented to permit proper flow from the carboy to the washer. Verify that all of the connections on the purified water system are air-tight.

Drain Connection

- Verify the drain line and connection meet all local plumbing codes.
- Tubing or pipe 5/8" (1.6 cm) ID or larger should be used for the drain.
- Do not route the drain to an elevation more than 36" (91 cm) above the pump discharge. Do not reduce the size of the drain plumbing.
- Do not remove the hose from the ties on the rear of the glassware washer.
- If connecting to a sink drain the use of an air gap is strongly recommended for all installations to prevent the siphoning of wastewater into the washer. See Figure 3.
- The drain hose can be routed to either a sink or a floor drain. If you route the drain hose to a sink drain without using an air gap, the highest point of the drain hose must be above the highest water level in the sink. See Figure 4.

Figure 3

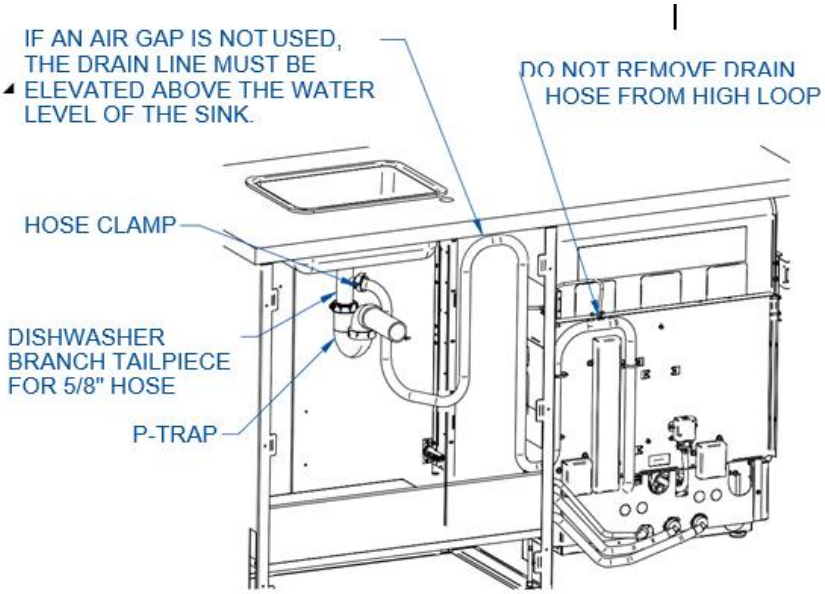

Figure 4

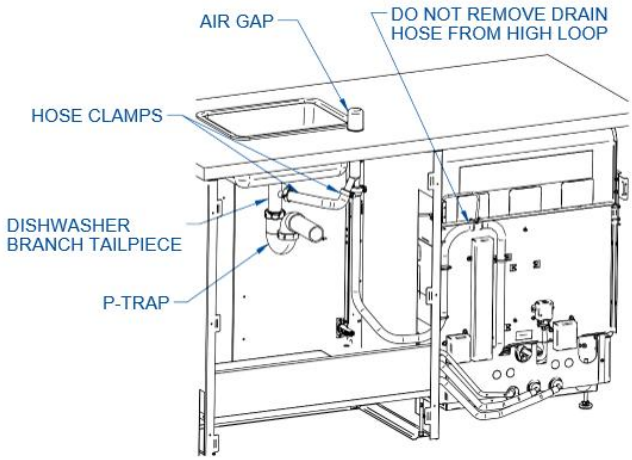

Electrical Connection

- Verify the power supply meets the requirements specified on the data plate (serial tag).
- Undercounter and Freestanding Washers should be hard-wired directly into a junction box.
- Verify compliance with all local electrical codes.
- Unless converting a 230 volt 3-phase unit to single phase, do not disturb any wiring internal to the washer.
- If connecting two legs of a 3-phase power system to obtain single-phase power, consult a professional to verify all codes/standards are followed. An electrical professional can determine the appropriate connections for either a Wye or Delta connected power source.
- The supply circuit for the 2.0kW single phase units must be at least 12 AWG 2-wire grounded cable and must be connected to a dedicated service with a 20 amp circuit breaker or fuse.

- Wiring must comply with all local electrical codes. Type THW or THWN wire may be used if it complies with local codes.
- The supply circuit for the 6.0kW 3-phase units require at least 10 AWG 3-wire grounded cable and must be connected to a dedicated service with 30 amp circuit breakers or fuses(12 amp for 400V).

If converting the 230 volt 6.0kW 3-phase unit to operate on 230 volt or 208 volt single phase, a dedicated 40 amp circuit breaker is required with 2 conductor grounded 8 AWG cable. Additional changes to the washer's internal wiring are required. Refer to the detailed conversion instruction tag secured to the wiring harness behind the front toe kick or the bottom image in Figure 6.

Refer to Figures 5 and 6 and follow the steps below to connect the washer to an appropriate power source.

- Make sure electrical power is turned off.
- Remove the lower toe kick panels on the washer by removing the six screws.
- Remove the electrical box by loosening the two screws on each side of the washer base and removing the one screw located at the lower center of the box.
- Without disconnecting the existing wiring, carefully pull the electrical box out enough the gain access to back side.
- Carefully route the electrical supply wire through the strain relief clamp located in the back center of the base to the strain relief clamp on the back of the electrical box.

Figure 5

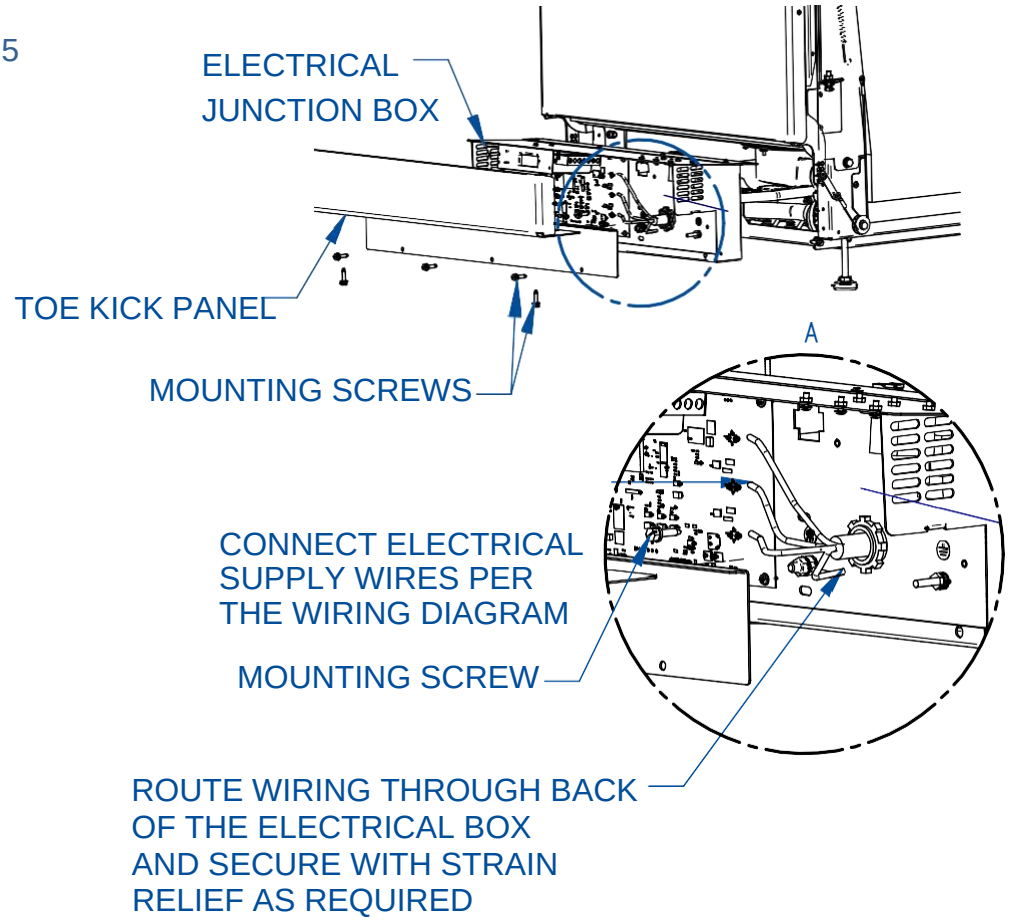

- Connect the customer supplied service wires to the appropriate wire nuts on the main wiring harness. Refer to the appropriate wiring diagram shown below. Make certain the wiring connections match the wiring diagram for the voltage of the washer being installed. Reference Figure 6.
- Connect the ground wire from the supply cable to the ¼-20 ground stud on the electrical box using a 1/4" lug or ring terminal.

Figure 6

120/208/230v 1 PHASE SERVICE

CONNECT TO WIRE NUTS

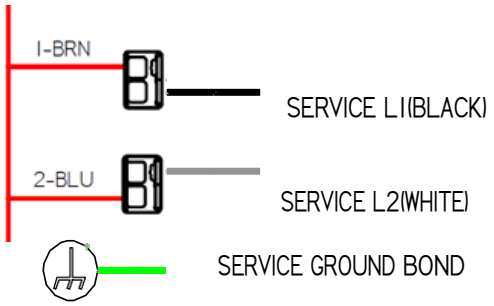

208/230v 3 PHASE SERVICE

CONNECT DIRECTLY TO TERMINAL BLOCK

208/230VAC 3 PHASE USA SERVICE

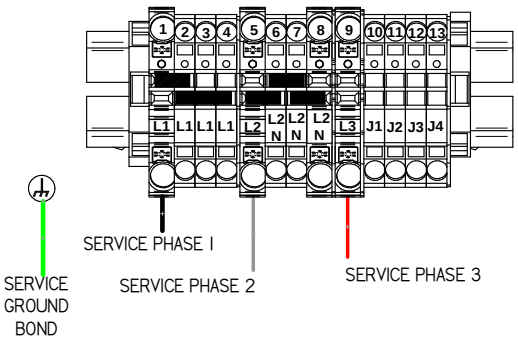

NOTE: WITH HIGH LEG DELTA (WILD LEG) 3 PHASE POWER, CAP NEUTRAL AND DO NOT USE. NO OTHER WIRING CHANGES REQUIRED. SEE 208V 3PH ABOVE

208/230VAC 3 PHASE EU SERVICE

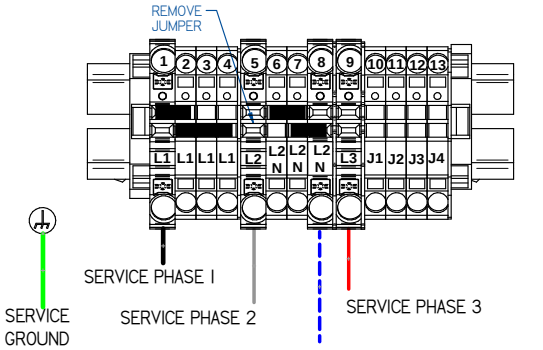

NOTE: WITH HIGH LEG DELTA (WILD LEG) 3 PHASE POWER, CAP NEUTRAL AND DO NOT USE. NO OTHER WIRING CHANGES REQUIRED. SEE 208V 3PH BELOW

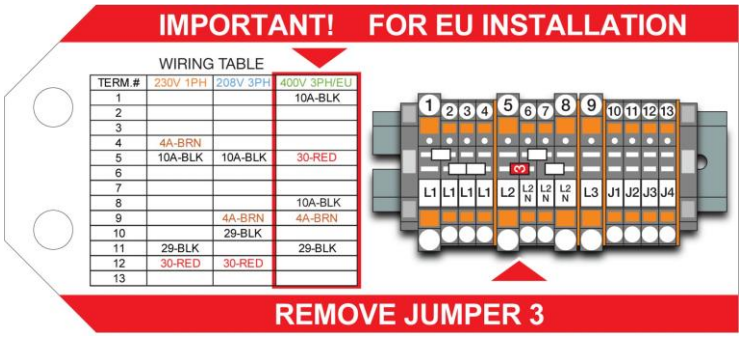

TERM.#	230V 1PH	208V 3PH	400V 3PH/EU
1			10A-BLK
2			
3			
4	4A-BRN		
5	10A-BLK	10A-BLK	30-RED
6			
7			
8			10A-BLK
9		4A-BRN	4A-BRN
10		29-BLK	
11	29-BLK		29-BLK
12	30-RED	30-RED	
13			

- Secure the supply power cable with the two strain relief clamps at the back of the electrical box and the back of the base.

- Carefully reinstall the electrical box making sure the slack from the cable does not interfere with the washer's internal wiring, the pump fans or the drain valve linkage. Use cable ties to secure the wire as needed.
- Replace the toe kick panels

Install the Washer

Once service lines are properly connected and the electrical service is off, the washer can be moved into to its final position. If installing an undercounter model make sure the mounting tabs at the top of the washer tank are bent out towards the front of the unit. As you push the unit in place, make sure service connections are not kinked or pinched. Once in place, verify the unit is level in both directions. The final height adjustment can be made at this time. Undercounter models must then be attached to the counter top. Freestanding model's height can be adjusted to match the adjoining countertop or as needed. Follow the instructions below to level and secure the washer.

Leveling the Washer

- Locate the Allen Wrench used to open the door previously.
- Push the Allen Wrench into the hole in the control panel until the door opens.
- Retain the Allen Wrench for emergency access in case of power failure.

Figure 7

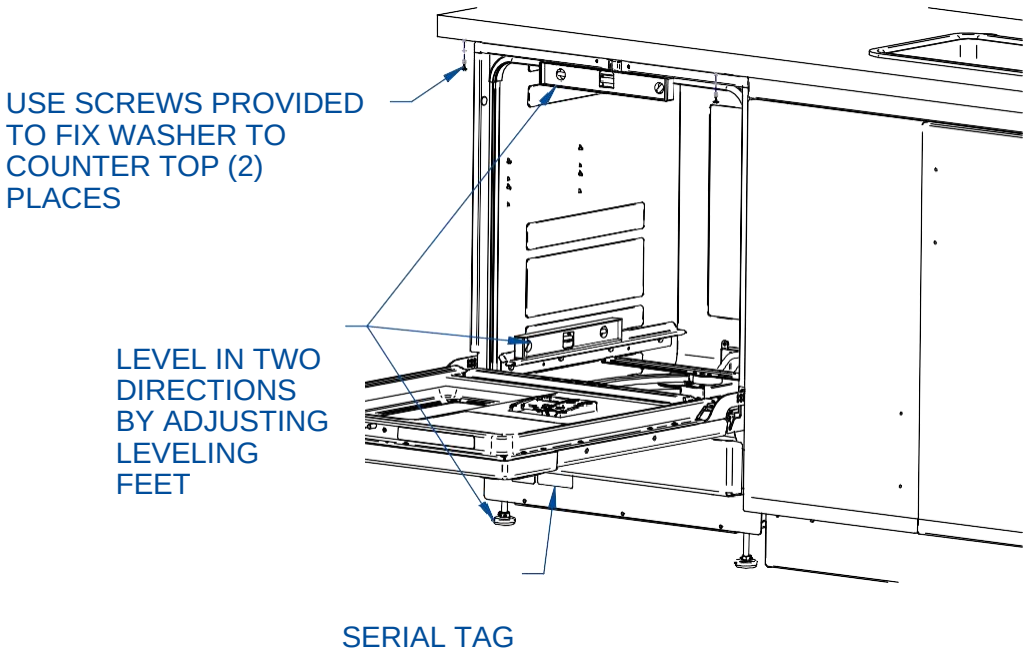

- Turn the four leveling feet, as needed, to level the washer.
- Level the washer side-to-side by placing a short level on the inside top edge of the door. See Figure 7 for the placement of the level.
- Check the level front to back by placing a level on the lower rack rails.

- When the washer is level, check the operation of the washer door for alignment with the washer tank.
- Verify the door is centered in the opening by closing it slowly. If the door hits the right side of the tank, raise the right front corner of the washer. If the door hits the left side of the tank, raise the left front corner of the washer.
- The racks can now be reinstalled.

Securing the Washer to the Countertop

- If an undercounter washer model, two screws are provided to attach the front of the washer to the underside of the countertop or work surface. After the washer is level, in its final position and the washer door is properly centered, install the two screws through the mounting tabs at the top of the tank, then into the bottom of the counter top to stabilize the unit as shown in the Figure 7.
- Once the washer is in a secure position the toe kick panels can be reinstalled as well as the lower filler panel if required to hide the space below the washer's base.

Testing Your Washer

Now that you have made the required water and electrical connections to your washer, a series of diagnostic steps are provided in this section to test the operation of the washer.

Before turning on the washer, make certain the supply water is turned on and no packing material remains inside the washer.

The electrical service to the washer can now be turned on.

Running Diagnostics

To verify the washer is operating properly, perform the diagnostics procedure detailed below. This should take approximately 10 minutes to complete.

- From any screen touch the HELP Icon.
- Touch the Diagnostic icon.
- Scroll down to Manual/Auto Run Test, select each component and confirm.
- The component selected will activate and test the low voltage components to verify their operation.
- Confirm that all tested components passed.
- Scroll up to Fill All The Way, select and confirm. The washer will fill to the set point with hot water. When complete, the water level should touch but not cover the heaters. If needed the test can be stopped by selecting Fill All The Way again and confirming.
- Once the tank is full of water, make sure the door is closed, select and confirm Wash Pump. The wash pump should spin up for approximately 10 seconds.
- Select Drain All the Way and confirm. The washer should drain for approximately 3 minutes.

Verification

- Once the diagnostic tests are complete, scroll through the status of each line item to verify that it passed the tests. If there are any fails, refer to User's Manual Section 10: Troubleshooting.

This Quick Start Installation Guide may not provide all the information necessary for your particular glassware washer installation. For further details and precautions, access to video links and the full user's manual, scan the QR Code below or click here.